3" LCD CTV/Radio 03LC3150/02R/05R/10R

Service
Service
Service

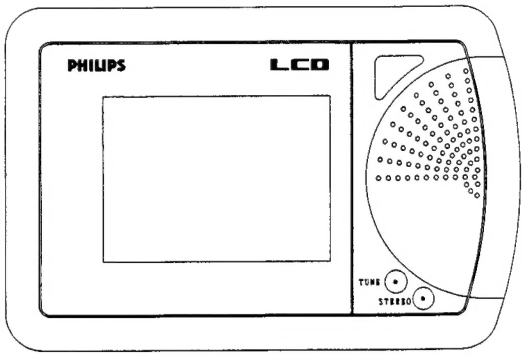

ServiceManual

CHASSIS LCD3-ECO

(GB) Safety regulations require that the set be restored to its original condition and that parts which are identical with those specified be used.

(NL) Veiligheidsbepalingen vereisen, dat het apparaat in zij oorspronkelijke toestand wordt teruggebracht en dat onderdelen, identiek aan de gespecificeerde worden toegepast.

(D) Bei jeder Reparatur sind die geltenden Sicherheidsvorschriften zu beachten. Der Originaalzustand des Geräts darf nicht verändert werden. Für Reperaturen sind Original-Ersatzteile zu verwenden.

(F) Les normes de sécurités exigent que l'appareil soit remis à l'état d'origine et que soient utilisées les pièces de rechange identiques à celles spécifiées.

(I) Le norme di sicurezza esigono che l'apparecchio venga rimesso nelle condizoni originali e che siano utillizzati pezzi di ricambiago a quelli specificati.

AC/DC	$220V_{AC}$ 8W $240V_{AC}$ 8W (-/05R)		PAL BG (-/02R/10R) PAL I (-/05R)		TEPZ5-001A
	$9V_{DC}$, 3,5W	A/V	Input level: Video 1Vpp Audio 500mVrms		TV Channels VHF: 2-12 UHF: 21-69
b a c	a x b x c 136x49x90mm		430g (with battery)		Radio Bands AM 531-1602KHz FM 88-108MHz
	150mW				

Published by Consumer Electronics Printed in The Netherlands ©Copyright reserved Subject to modification 4822 727 18958

PHILIPS

PHILIPS

Spare parts list / Stückliste / Liste

Cabinet parts

001B	4822 432 10933	Rear case -/02R
001B	4822 432 10938	Rear case -/05R/10R
002B	4822 290 81361	+,- Terminal plate
003B	4822 290 81464	+,- Terminal plate
004B	4822 462 10501	Stand
005B	4822 492 71004	Spring for stand
007B	4822 290 81465	+ Terminal spring
008B	4822 290 81466	- Terminal spring
009B	4822 290 81467	CHG. Terminal
010B	4822 502 13877	Screw
020B	4822 290 81468	Contact plate for rod ant.
021B	4822 256 91831	Holder
022B	4822 380 20422	Reflector
023B	4822 466 70731	Diffuser
024B	4822 413 31674	Knob volume
025B	4822 502 13879	Screw
026B	4822 411 61846	Band knob
027B	4822 411 61845	Power knob
028B	4822 410 61637	Button strip
029B	4822 502 13203	Screw
030B	4822 413 31675	Tuning knob
031B	4822 532 12123	Bush
032B	4822 502 13878	Screw
033B	4822 528 90834	Rollor
034B	4822 333 30222	Tuning dial
035B	4822 502 13881	Screw
050B	4822 432 10932	Front case
051B	4822 450 61808	Display window -/02R/10R
051B	4822 450 61821	Display window -/05R
052B	4822 450 61809	Tuning window
053B	4822 381 11292	LED Lens
054B	4822 502 13203	Screw
055B	4822 417 11152	Bolt
058B	4822 502 13201	Screw
059B	4822 404 31224	Bracket
062B	4822 502 13928	Screw
063B	4822 502 11875	Screw
064B	4822 502 13928	Screw
066B	4822 432 10934	Lid

Accessories

4822 218 20877	AC Adaptor for 220V
4822 272 10272	AC Adaptor for 240V
4822 138 10305	Rechargeable battery pack (SBC3621)
4822 015 20223	Car adaptor (SBC3601)
4822 321 21602	Audio video cable (SBC1059)
4822 015 20307	Camera mounting bracket (SBC3613)
4822 263 50183	Antenna adaptor (22AV5262)
4822 015 20383	Stereo earphone (SBC3137)

Remark: For the Service Code numbers of items indicated in the exploded view with A,J,LP,SP,PL,R and S see Chassis Manual LCD3-ECO

Exploded view

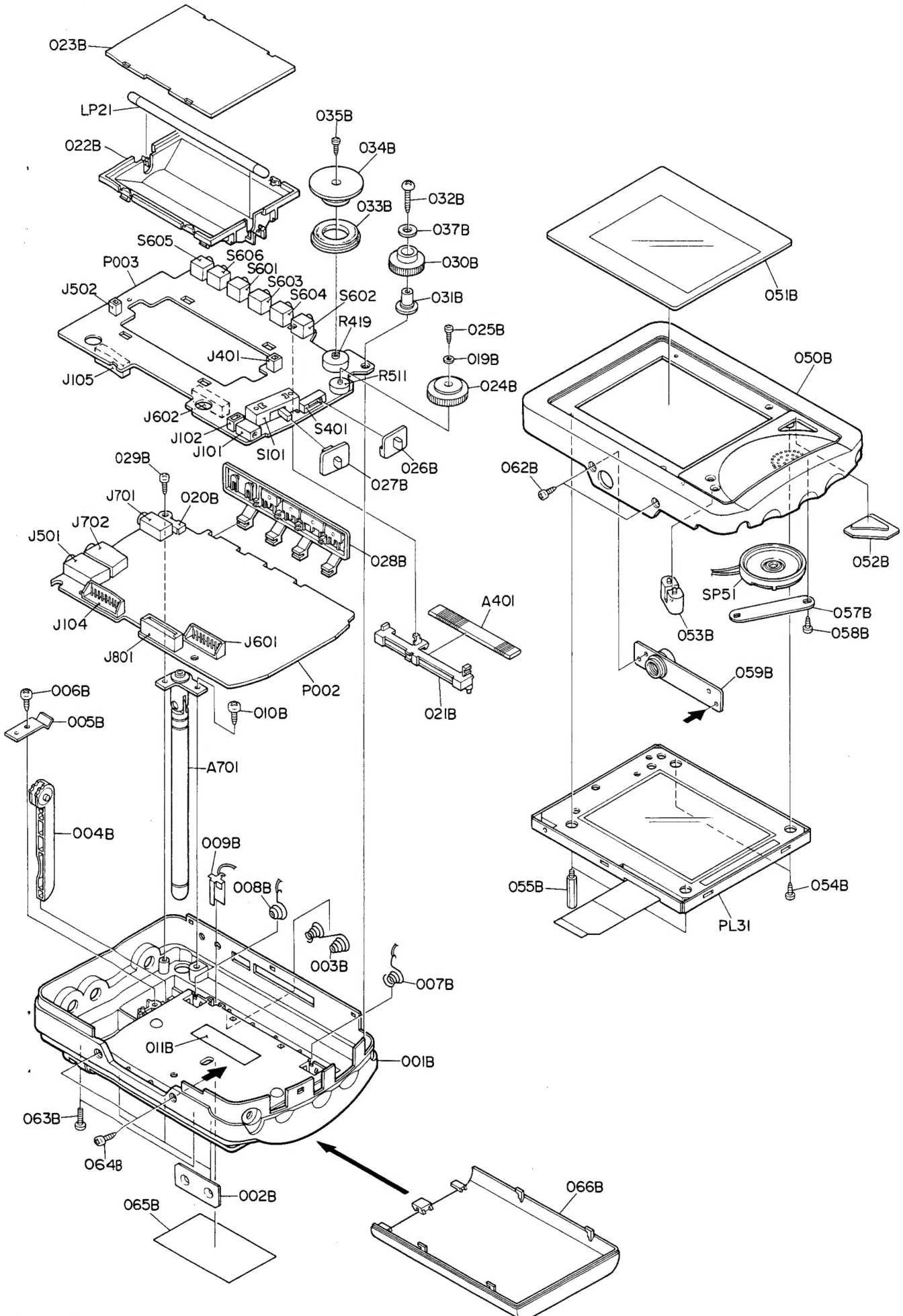

CS40919

Controls - In/outs

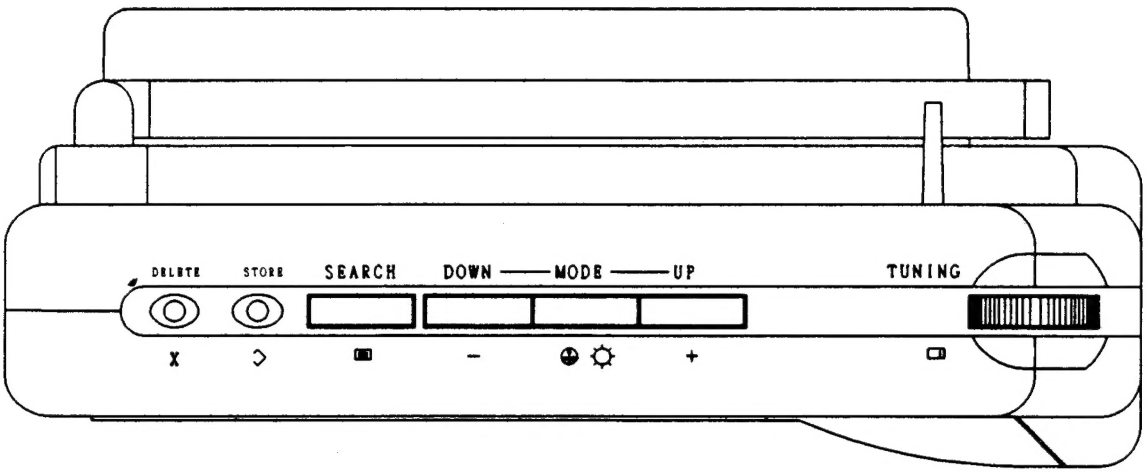

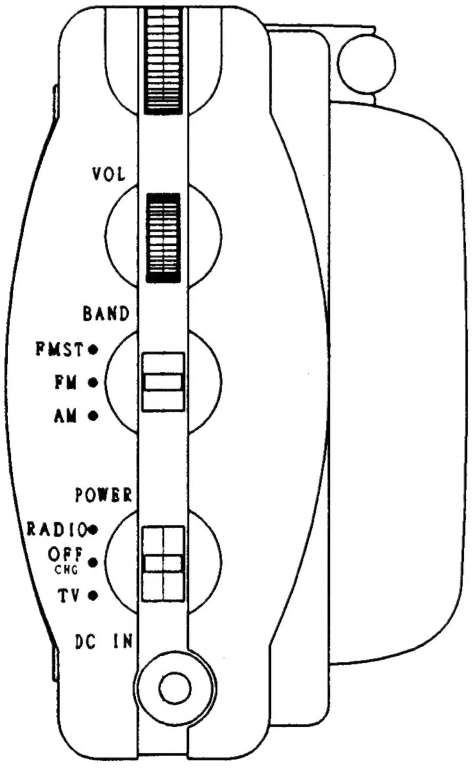

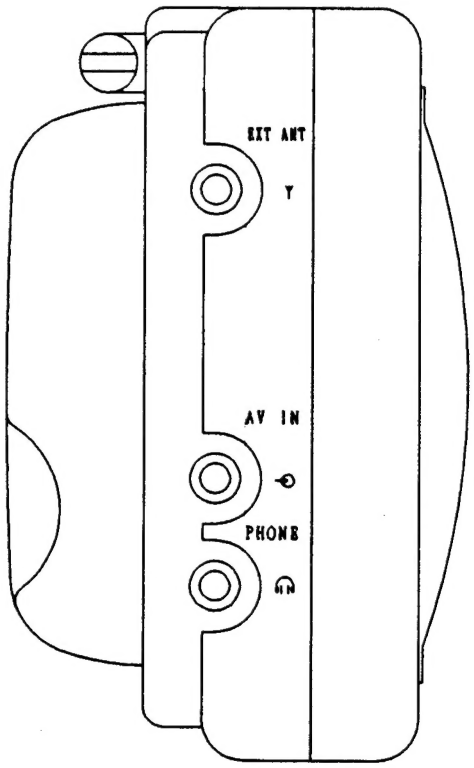

4507

3" LCD CTV/Radio CHASSIS LCD3-ECO

Service
Service
Service

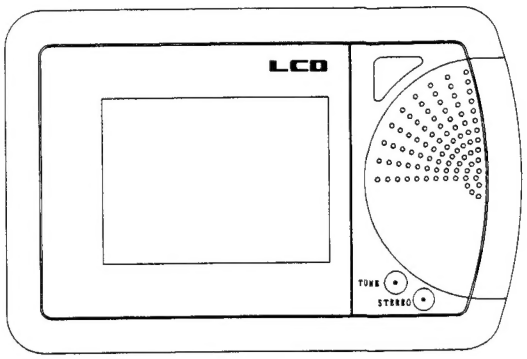

Service Manual

Contents

		Page
1.	Contents	1.1
2.	Technical data	2.1
3.	Warning and remarks	3.1
4.	Mechanical instructions	4.1
	Abbriviations	4.2
	Wiring diagram	4.4
5.	Detailed block diagram	5.1
6.	Electrical diagrams and print-layouts:	
	Print-layout	6.1
	RF, IF, Audio and Power supply (diagram A)	6.4
	Print-layout	6.7
	Control (diagram B)	6.10
	Print-layout	6.13
	Chroma (diagram C)	6.16
	Print-layout	6.19
	Radio Backlight and Switch block (diagram D)	6.22
	Track pattern of both sides	6.25
7.	Electrical instructions	7.1
8.	Repair tips, repair mode	8.1
9.	Electrical parts list	9.1

Published by Consumer Electronics Printed in The Netherlands ©Copyright reserved Subject to modification GB 4822 727 18959

4507

CS40981 GB

2.1 CHASSIS LCD3-ECO

Technical Data

1. TV part

Mains voltage	: 220V ± 10% (via an adapter)
	: (240V for /05)
Supply voltage	: 9V (6x 1.5V batteries)
Power consumption	: 8 Watt at $220V_{AC}$
	: 3.5Watt at $9V_{DC}$
Antenna input impedance	: 75 Ω -coax (not for -/02/08) or via rod antenna.
Screen	: LCD screen (3" picture diagonal)
Number of preselections	: 69

2. Radio part

FM frequency range	: 88 - 108 MHz
AM frequency range	: 531 - 1602 kHz
Output	: 150mWatt

3. Control functions:

: PAL BG (-/02/08/10)
: PAL I (-/05)

Power : Radio/TV/Off mode (slide switch)

Band : AM/FM mode (slide switch)

X : Delete (to delete a programme number)

: Store (to store a programme number)

: Search (to search for a station)

MODE : Brightness Saturation, Channel +,-

: Knob for Radio tuning

VOL : Knob for sound volume

4. Connection facilities:

3,5mm : 9V (via a mains adapter)

3.5mm : External antenna (75 Ω), not for -/02/08

: Audio 500mV ± 150mV for 100mW

3,5mm : Video 1V ± $350mV_{PP}$

3,5mm : 32Ω (5mWatt)

Warnings and Remarks

1. Safety regulations require that the set should be returned in its original condition and that components identical to the original components are used. The safety components are indicated by the symbol ⚠.

2. **ESD**
   All ICs and many other semiconductors are sensitive to electrostatic discharges (ESD). Careless handling during repair can drastically shorten the life. Make sure that during repair you are connected by a pulse band with resistance to the same potential as the earth of the unit. Keep components and tools also at this same potential.

3. When repairing a set, always connect it to the mains voltage via an isolating transformer.

4. Proceed with care when measuring the fluorescent lamp drive circuit.

5. Never replace modules or other components while the set is switched on.

6. When making settings, use plastic rather than metal tools.
   This will prevent any short circuits and the danger of a circuit becoming unstable.

1. The DC voltages and oscillograms should be measured relative to the tuner earth (⏚).

2. The DC voltages were measured under different conditions. Please refer to the remarks on the diagrams.

3. The semiconductors indicated on the circuit diagram and in the parts lists are per position fully interchangeable with the semiconductors in the set, regardless of the type designation on those semiconductors.

Mechanical instructions

1. Remove the front.

- Remove the 2 screws at the rear cover side.
- Remove 2 screws at the bottom side (see A in Fig 4.1.).
- The front (LCD screen included) can "click" out now from the rear cover. Start at bottom side.

2. Remove the PCB unit.

- Remove the radio tuning knob.
- Remove the battery connection.
- Remove the screw fixing the connection plate between PCB unit and telescopic aerial connection.
- The complete PCB unit can now be removed out of the rear cover together with operating knob strip. Start lifting at tuning knob side.

3. Service position of PCB,s.

- To get a service position we need 2 extension cables for interconnection of Main and Radio PCB.
  Cable 1 (10p male-10p female)
  Cable 2 (9p male- 9p female)
  Both cables are delivered as set.
  Service code number of set is 4822 310 31969

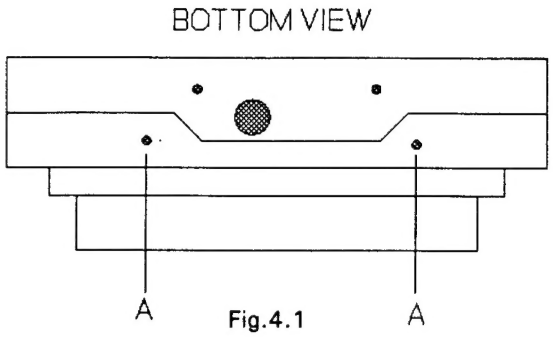

Fig.4.1

Abbreviations and Explanations

AC : ALTERNATING CURRENT
ACC : AUTOMATIC COLOUR CONTROL
ADJ. : ADJUSTMENT
AF : AUDIO FREQUENCY
AFC : AUTOMATIC FREQUENCY CONTROL
AGC : AUTOMATIC GAIN CONTROL
AM : AMPLITUDE MODULATION
ANT. IN : ANTENNA INPUT
APC : AUTOMATIC PHASE CONTROL
ATT : ATTENUATION
AV : AUDIO VISUAL
A/V : AUDIO AND VIDEO
A/D : ANALOGUE TO DIGITAL CONVERSION
A0 : ADRESS INPUT 0
A1 : ADRESS INPUT 1
A2 : ADRESS INPUT 2
B : BLUE SIGNAL
BGP : BURST GATE PULSE
BM : POWER SUPPLY
BPF : BAND PASS FILTER
BS : SHORT IN UHF AND VHF HIGH BAND
BU : 4V IN UHF BAND
BV : 4V IN VHF BAND
B. LIGHT : BACK LIGHT
CE : CHIP ENABLE
CHG : CHARGE
COL. : COLOUR
CONT. : CONTROL
CPU : CENTRAL PROCESSING UNIT
CS : CAPACITOR, SHORTAGE
C.G. : CHARACTOR GENERATER
D/A : DIGITAL TO ANALOGUE CONVERTOR
DC : DIRECT CURRENT
DECOD. : DECODER
DET : DETECTOR
D.L. : DELAY LINE
EXT.ANT. : EXTERNAL ANTENNA
FM : FREQUENCY MODULATION
FRP : FRAME PULSE
F/F : FLIP-FLAP
F.B. : FEED BACK
F.F : FREQUENCY DIVIDER
G : GREEN SIGNAL
GEN : GENERATOR
GND : GROUND
H : HOLIZONTAL SYNCHRONIZATION SIGNAL
HD : HOLIZONTAL SYNCHRONIZATION SIGNAL
HSY : HOLIZONTAL SYNCHRONIZATION SIGNAL
IF : INTERMEDIATE FREQUENCY
INT/EXT : INTERNAL / EXTERNAL
INV. : INVERTER
LCD : LIQUID CRYSTAL DISPLAY
LED : LIGHT EMITTED DIODE
L.C.D. : LIQUID CRYSTAL DISPLAY
NC : NO CONNECTION
N.C. : NO CONNECTION
NT/PM : HIGH IN PAL-M, LOW IN NTSC
OSC : OSCILLATOR
OSC1 : OSCILLATOR INPUT
OSC2 : OSCILLATOR OUTPUT
OSD : ON SCREEN DISPLAY
OUT : OUTPUT
PAL : PHASE ALTERNATION BY LINE
PRE AMP : PRE-AMPLIFIER
PWM : PULSE WIDTH MODULATION
R : RED SIGNAL
RAM : RANDOM ACCESS MEMORY
ROD ANT : ROD ANTENNA
ROM : READ ONLY MEMORY
RF AGC : RADIO FREQUENCY AUTOMATIC GAIN CONTROL
RST : RESET
SAW : SURFACE ACOUSTIC WAVE
SCL : SERIAL CLOCK
SDA : SERIAL DATA
SEP : SEPARATOR
ST : STEREO
SW. : SWITCH OR SWITCHING
SWP : SWEEP
SYN : SYNCHRONIZATION SIGNAL
SYNC : SYNCHRONIZATION SIGNAL
TR. : TRANSISTOR
TU : TUNING VOLTAGE
TV : TELEVISION
TUN : TUNING
TUNE : TUNING VOLTAGE
UHF : ULTRA HIGH FREQUENCY
U.V.L.O : UNDER VOLTAGE LOCK OUT
VB : +B POWER SUPPLY
VCC : SUPPLY VOLTAGE
VCO : VOLTAGE CONTROLLED OSCILLATOR
VDD : SUPPLY VOLTAGE
VD : VERTICAL SYNC SIGNAL
VEE : SUPPLY VOLTAGE (NEGATIVE)
VHF : VERY HIGH FREQUENCY
VHF H/L : VHF HIGH / LOW
VREF : REFERENCE VOLTAGE
VSS : 0V (GROUND)
VSY : VERTICAL SYNCHRONIZATION SIGNAL
V COM : COMMON VOLTAGE
V IN : INPUT VOLTAGE
V REF : REFERENCE VOLTAGE
V R : RED SIGNAL
V G : GREEN SIGNAL
V B : BLUE SIGNAL
Y : Y SIGNAL, LUMINANCE
Y/BL : OSD Y SIGNAL, LUMINANCE
X IN : CRYSTAL OSCILLATOR INPUT
X OUT : CRYSTAL OSCILLATOR OUTPUT

Abbriviations and Explanations

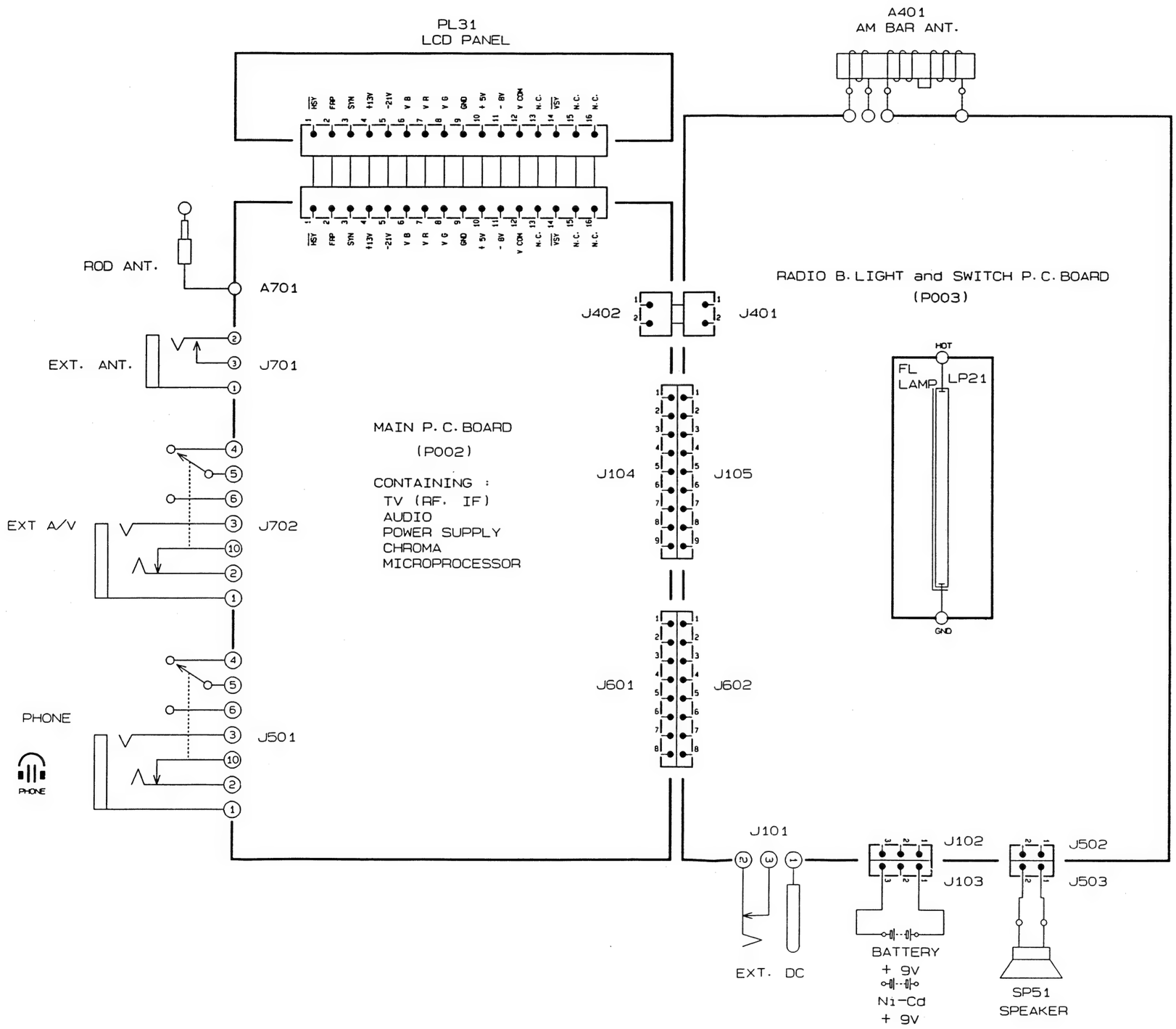
PL31
LCD PANEL
HSY FRP SYN +13V -21V V B V R V G GND + 5V - 8V V COM N.C. VSY N.C. N.C.
A401
AM BAR ANT.
ROD ANT.
A701
EXT. ANT.
J701
EXT A/V
J702
PHONE
J501
PHONE
MAIN P. C. BOARD
(P002)
CONTAINING :
TV (RF. IF)
AUDIO
POWER SUPPLY
CHROMA
MICROPROCESSOR
RADIO B. LIGHT and SWITCH P. C. BOARD
(P003)
J402
J401
J104
J105
J601
J602
HOT
FL LAMP
LP21
GND
J101
EXT. DC
J102
J103
BATTERY
+ 9V
Ni-Cd
+ 9V
J502
J503
SP51
SPEAKER

Block diagram Schéma-Bloc

CHASSIS LCD3-ECO 5.1 5.2 CHASSIS LCD3-ECO

Block Schaltbild Blokschema

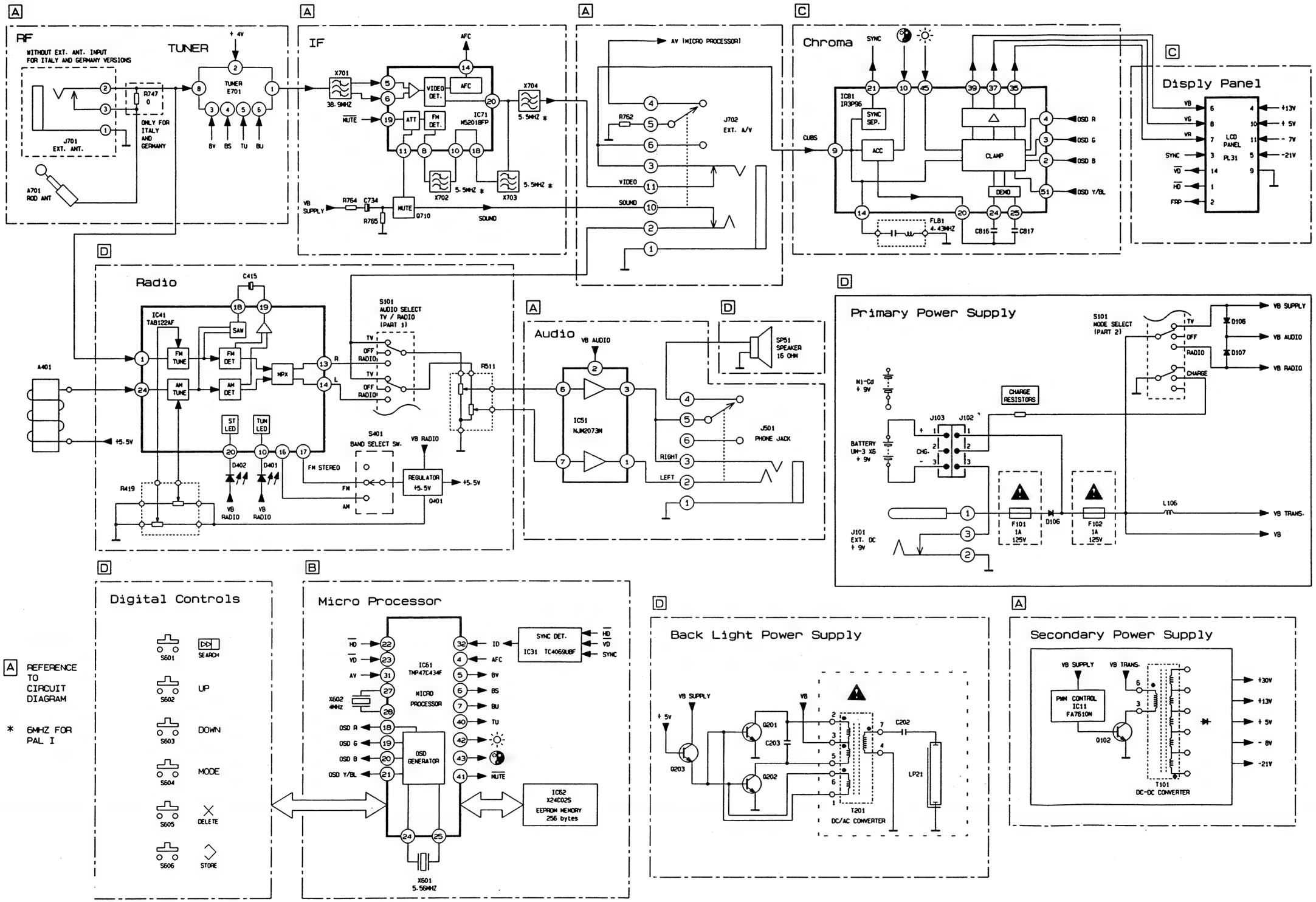

Block Schaltbild Blokschema

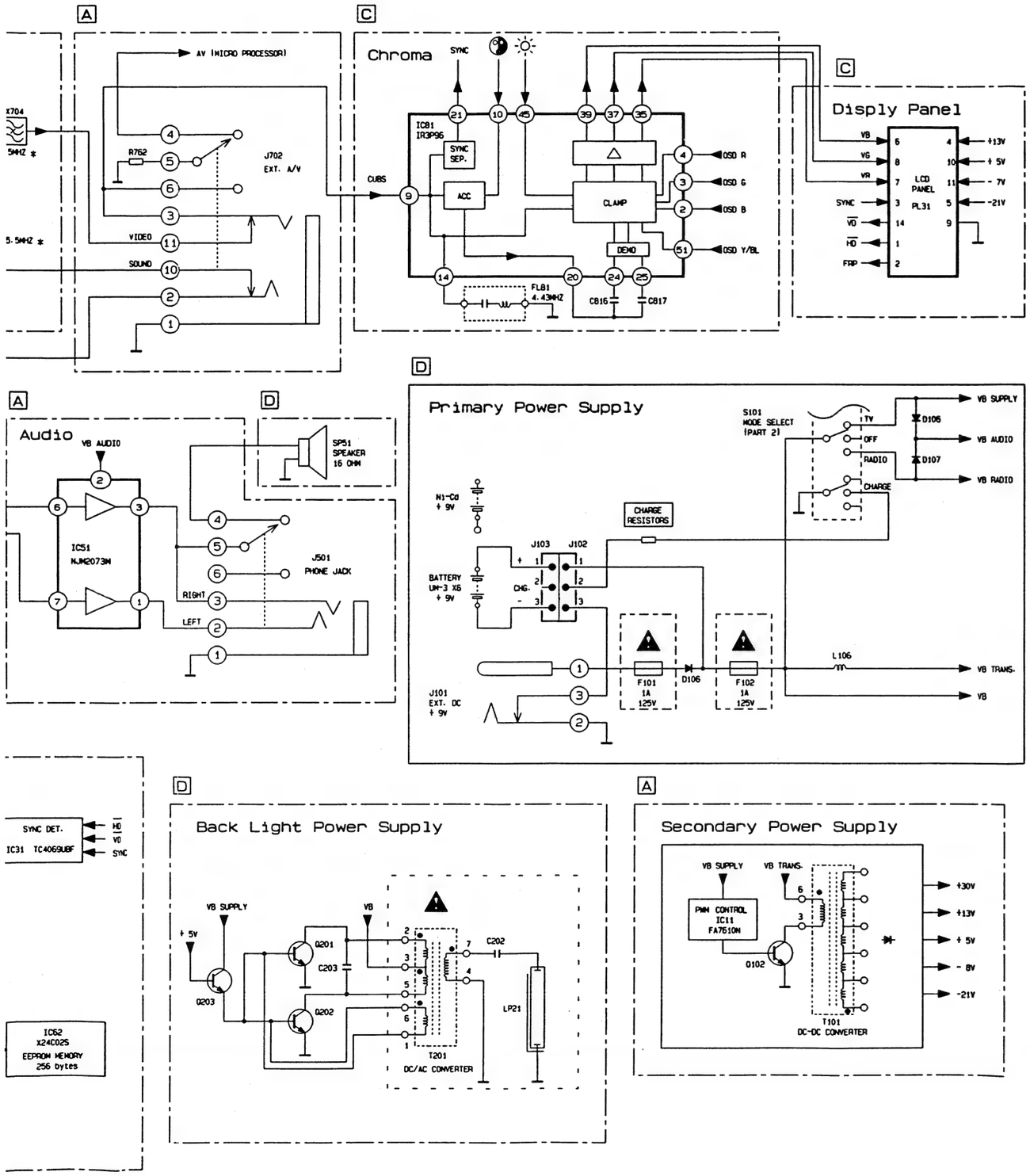

Printdarstellung Print Layout

C101 A3 C802 B6 R102 B3 R753 D4 X703 E5
C102 B3 C803 B6 R103 B3 R754 C5 X704 D6
C103 A4 C804 B6 R104 B3 R755 C5 X801 C4
C104 B4 C805 B5 R105 B3 R756 D5 Z601 A7
C105 B3 C806 B5 R106 B3 R757 D5
C106 A2 C807 B5 R107 B3 R758 D5
C107 B4 C808 B6 R108 B3 R760 D6
C108 B4 C809 B5 R108 A4 R761 D6
C109 A4 C810 C6 R110 B4 R762 B2
C110 A4 C811 C5 R111 B4 R763 D5
C111 A2 C812 B5 R112 A3 R764 C2
C112 A2 C813 C6 R113 B4 R765 C2
C113 A2 C814 C5 R301 D7 R801 B5
C114 B2 C815 C5 R302 D7 R802 B5
C115 B2 C816 C5 R303 D7 R803 B5
C116 B3 C817 C5 R304 D6 R804 B6
C117 B4 C818 C4 R501 A1 R805 B6
C118 B3 C819 C4 R502 A2 R806 B6
C119 A4 C820 B4 R503 B2 R807 B5
C120 B3 C821 B5 R504 C2 R808 B6
C301 D7 C822 C5 R505 B2 R809 B6
C302 D6 C823 B5 R506 C1 R810 B6
C501 D1 C824 B4 R507 C1 R811 C6
C502 B2 C825 A5 R508 C1 R812 C5
C503 C1 C826 B4 R601 A5 R813 B4
C504 C1 C827 B5 R602 A5 R814 B5
C505 A2 C828 B5 R603 A5 R815 B4
C506 B2 C829 B5 R605 A6 R816 C5
C507 C2 C830 C5 R606 A5 R817 C5
C508 D1 D101 A4 R607 A5 R818 C5
C509 B2 D102 B3 R608 B7 R819 C5
C510 A2 D103 A3 R610 B7 R820 B5
C511 A1 D104 A2 R611 A7 R821 C5
C601 A6 D105 B3 R612 B7 R822 B4
C602 B6 D106 E6 R613 A7 R823 B4
C603 B6 D301 D7 R614 A7 R824 B4
C609 E6 D601 B7 R615 A7 R825 B4
C610 A6 D602 B7 R616 A6 R826 A4
C612 D6 D603 B6 R617 B7 R827 A4
C613 B7 D701 D1 R618 C7 R828 B5
C656 C7 E701 D3 R620 A7 R829 B5
C657 C6 F101 E6 R621 A7 R830 B5
C658 B7 FL81 C6 R631 B6 R831 A5
C659 B7 FL82 C6 R632 B6 R832 B5
C660 B7 IC11 A3 R633 B6 R833 B5
C661 B7 IC31 E7 R634 B6 R834 B6
C662 B7 IC51 C1 R635 C7 R835 B6
C663 C7 IC61 B7 R636 C7 R837 B6
C664 C7 IC62 A7 R637 C7 R838 B6
C665 A7 IC71 D4 R638 C7 R840 C5
C701 D3 IC81 B5 R656 B7 R841 B6
C702 E4 J102 E7 R702 D3 R842 B6
C703 E4 J104 A2 R703 E3 R843 B6
C704 D4 J402 E2 R704 D4 R844 B5
C705 D3 J501 A1 R706 E4 R845 B6
C706 D3 J601 A5 R706 D4 R846 B6
C707 D3 J701 D1 R707 D3 R847 B6
C708 D2 J702 B1 R708 C7 R848 A6
C709 D2 J801 A4 R709 C7 R849 A6
C710 D2 L101 B4 R710 C7 R850 A5
C711 D6 L102 B4 R711 C7 R851 A5
C712 D7 L103 A2 R712 D6 R854 C4
C713 D7 L104 B2 R713 D7 R855 C4
C714 C7 L105 B3 R714 D7 R856 C4
C715 E4 L601 A5 R715 D7 R857 C5
C716 C6 L701 E4 R717 C7 R858 C5
C717 E2 L702 D3 R718 D7 T101 B3
C718 D2 L711 D5 R719 D7 TP13 A2
C719 E6 L712 D5 R720 D7 TP31 D7
C720 D6 L713 C6 R731 D7 TP61 A1
C721 E4 Q101 A3 R732 D6 TP62 B1
C722 D4 Q601 B7 R733 D7 TP62 A6
C723 C4 Q602 A7 R735 D3 TP63 A7
C724 D5 Q603 A7 R736 D3 TP64 A7
C725 D4 Q701 E4 R737 D2 TP70 D4
C726 D5 Q702 C7 R738 D2 TP71 D2
C727 D5 Q703 C7 R739 D3 TP72 D2
C728 D5 Q704 C7 R740 D3 TP73 E4
C729 D5 Q705 D2 R741 D3 TP74 D3
C730 E5 Q706 D6 R742 D2 TP75 D5
C731 D5 Q707 D7 R743 D3 TP76 D5
C732 D5 Q708 D7 R745 D2 TP78 B1
C733 E6 Q708 D8 R746 D1 TP81 A5
C734 C1 Q710 D6 R747 D1 X601 A6
C735 D6 Q711 D5 R750 D4 X602 A7
C736 D2 Q712 D2 R751 E4 X701 D4
C801 B5 R101 A3 R752 D5 X702 C5

Print Layout Dessins platine

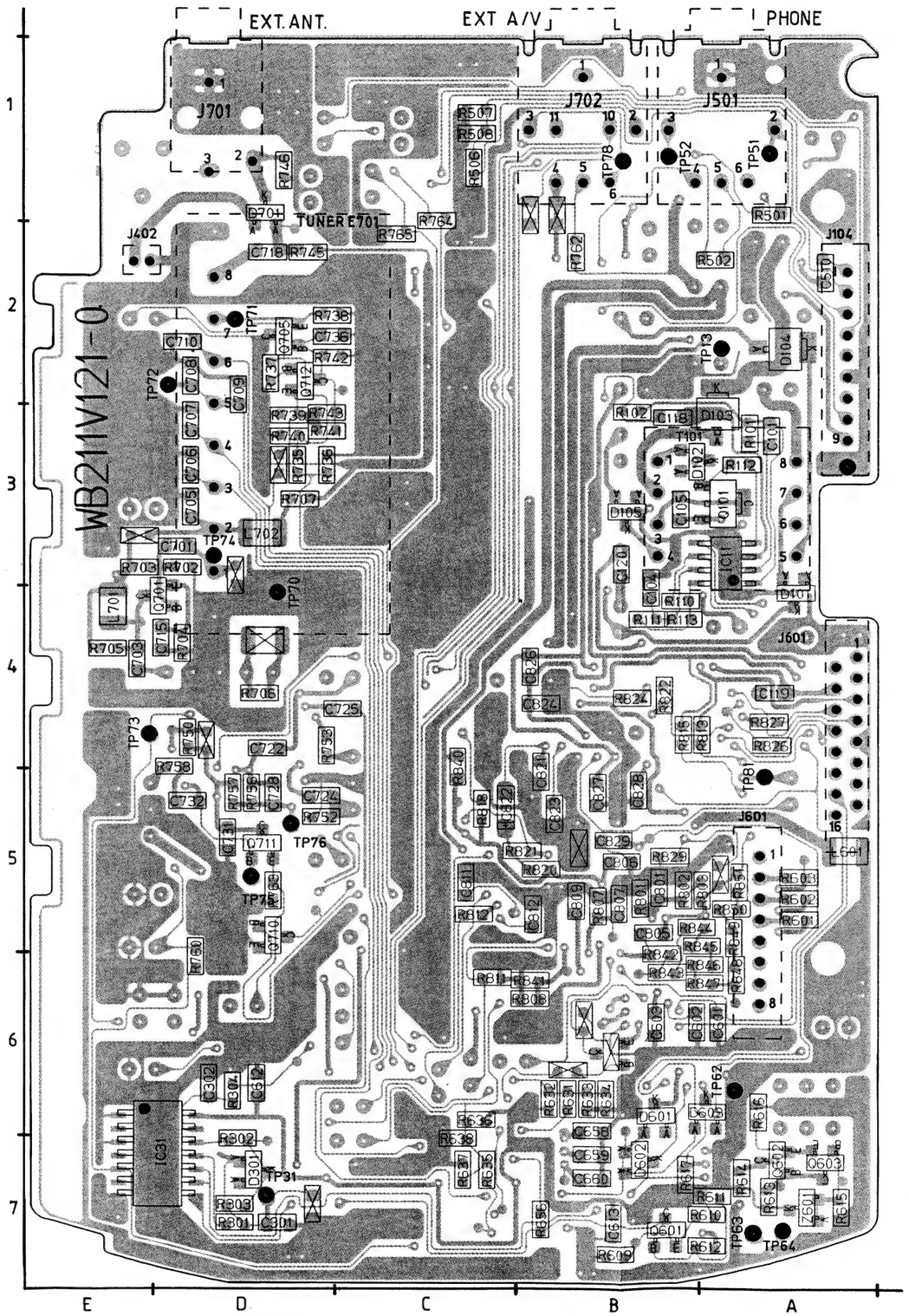

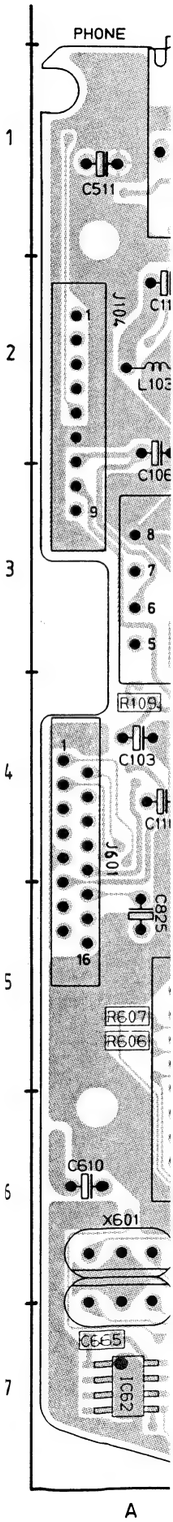

Print Layout Dessins platine

CHASSIS LCD3-ECO 6.2

03 E5
04 D8
01 C4
01 A7

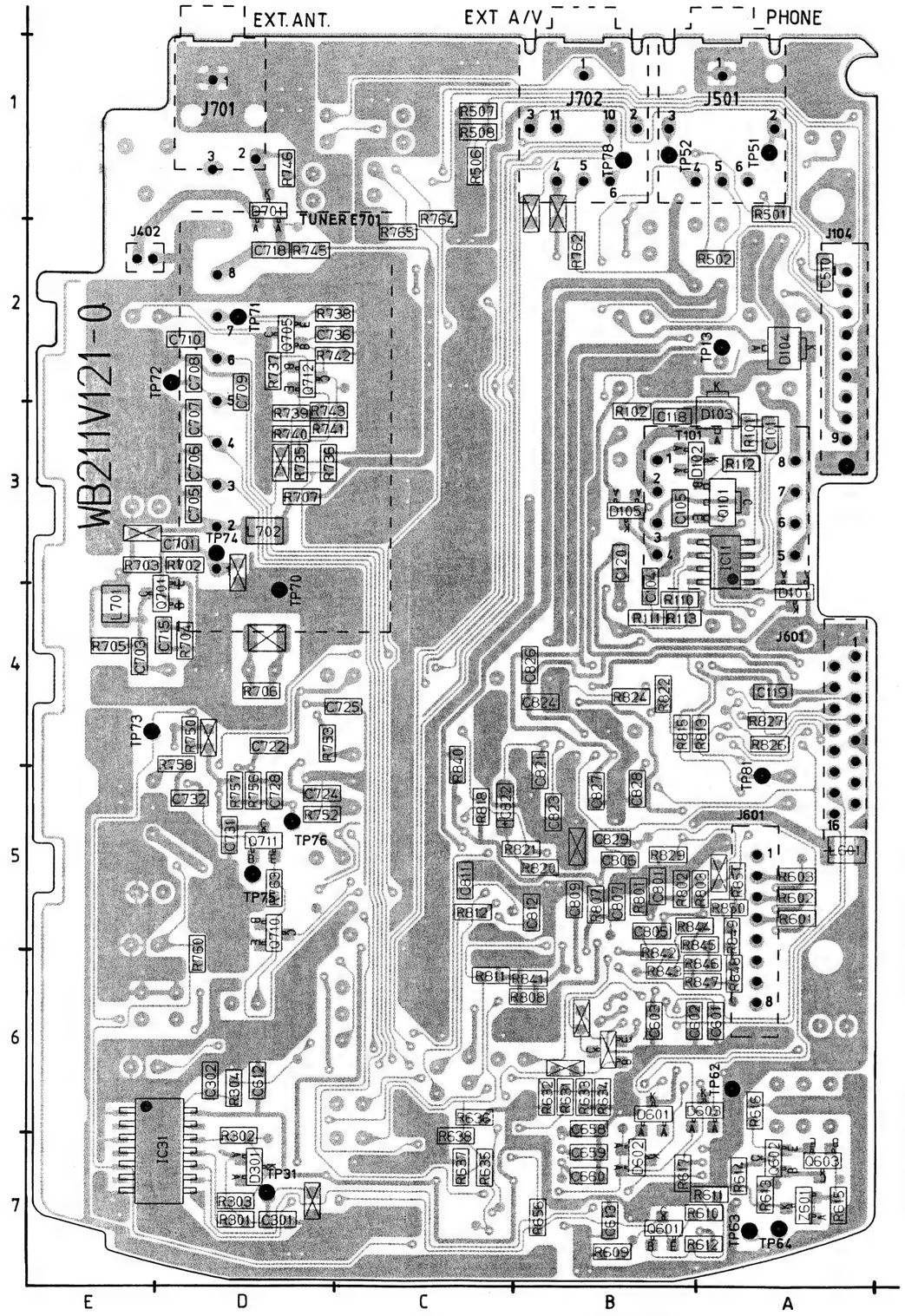

CHASSIS LCD3-ECO 6.3

Printdarstellung Print Layout

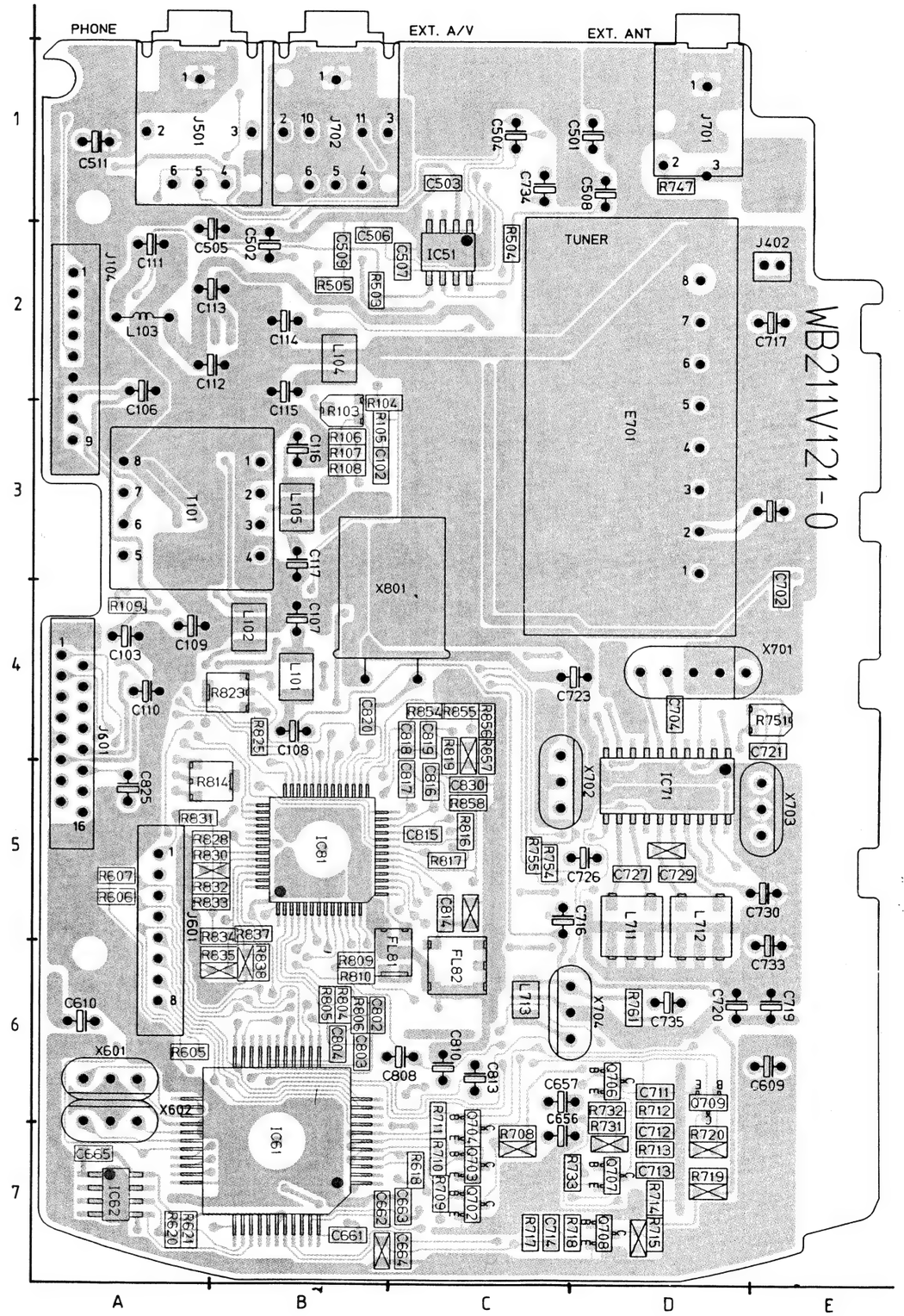

A RF IF AUDIO and POWER SUPPLY BLOCK P002

WITHOUT EXT. ANT. INPUT FOR ITALY AND GERMANY VERSIONS

A701 ROD ANT

J402 TO J401 (TO P003) (DIAGRAM D)

J701 EXT. ANT.

R747 0 ONLY FOR ITALY AND GERMANY

D701 1SS268

E701 TEPZ5X001A TUNER

ANT. IN RF AGC BU TU BS BV BH IF OUT

AGC BUFFER AGC INVERTER

ONLY X

BAND SELECT TRACKING SELECT

VHF H/L UHF VHF

PRE AMP.

X701 SAF38.9MZC60Z SAW FILTER

TP70 TP71 TP72 TP73 TP74 TP75 TP76

X	GENERAL EUROPE	/10R
	ITALY/GERMANY	/02R /08R
Y	U.K.	/05R

1 REFERENCE TO WAVE FORM NR.

IC71 M52018FP IF IC

NOISE INV. VIDEO DET. PHASE CONT. IF AMP. LIMITER F M DET. I F AGC R F AGC ATT SELECT AMP. AFC

VIDEO BUFFER DET. ADJ. AFC ADJ. RF AGC ADJ.

X704 X-TPS5.5MB Y-TPSL6.0MB

X703 X-SFE5.5MC2 Y-SFE6.0MC

L712 5CE-1242 L711 5CE-1242

X702 X-CDA5.5MC26 Y-CDA6.0MC33

MUTE

TO / FROM DIAGRAM

AFC F.B. MUTE AFC TUNE UHF VHF VHF H/L VIDEO AV

J702 EXT. A/V

R506 22K C510 4700P R508 33K R507 6800

TV SOUND OUT SPEAKER GND SPEAKER SOUND SOUND RIGHT IN SOUND LEFT IN GND VB TRANS. VB SUPPLY VB AUDIO

J104 TO J105 (TO P003) (DIAGRAM D)

IC51 NJM2073M AUDIO AMP. LEFT RIGHT

J501 PHONE

POWER SUPPLY

IC11 FA7610N SW. POWER CONTROL

VREF OSC CS VCC U.V.L.O V IN PWM F.B. OUT +5V ADJ. SW. TR.

DC-DC CONVERTER T101

+30V +13V + 5V - 8V -21V

RF, IF, A

A701	B2	L712	
C101	B7	L713	
C102	B7	Q101	
C103	C6	Q701	
C104	C6	Q702	
C105	D7	Q703	
C106	D6	Q704	
C107	E6	Q705	
C108	E6	Q706	
C111	E6	Q707	
C112	F6	Q708	
C114	E7	Q709	
C115	F7	Q710	
C116	E7	Q711	
C118	B7	Q712	
C119	F6	R101	
C120	F7	R102	
C601	G7	R103	
C602	H7	R104	
C603	H7	R105	
C604	H7	R106	
C605	H6	R107	
C606	G6	R108	
C607	H6	R109	
C608	G6	R110	
C609	I6	R111	
C610	I4	R112	
C611	H7	R113	
C701	C4	R601	
C702	C4	R602	
C703	D4	R603	
C704	D4	R604	
C705	B4	R605	
C706	B4	R606	
C707	B4	R607	
C708	B3	R608	
C709	B3	R702	
C710	C3	R703	
C711	D3	R704	
C712	D3	R705	
C713	E3	R706	
C714	E3	R707	
C715	C5	R708	
C716	E3	R709	
C717	D2	R710	
C718	B2	R711	
C719	F4	R712	
C720	F4	R713	
C721	F4	R714	
C722	G4	R716	
C723	G4	R717	
C724	G4	R718	
C725	H4	R719	
C726	H2	R720	
C727	G2	R731	
C728	G2	R732	
C729	G2	R733	
C730	F2	R735	
C731	F2	R736	
C732	F2	R737	
C733	G2	R738	
C734	H4	R739	
C736	F2	R740	
C736	C3	R741	
D101	E6	R742	
D102	E6	R743	
D103	E6	R745	
D104	E7	R746	
D106	E7	R747	
D701	C2	R750	
E701	B4	R751	
IC11	B7	R752	
IC71	F3	R753	
IC61	G6	R754	
J104	J5	R755	
J402	C1	R756	
J601	I7	R757	
J701	B2	R758	
J702	J4	R760	
L101	E6	R761	
L102	E6	R762	
L103	E6	R763	
L104	E7	R764	
L105	E7	R765	
L701	C4	R766	
L702	B4	T101	
L711	G2	TP13	

HF, ZF, Audio und Speizung

E | F | G | H | I | J

.Y BLOCK P002

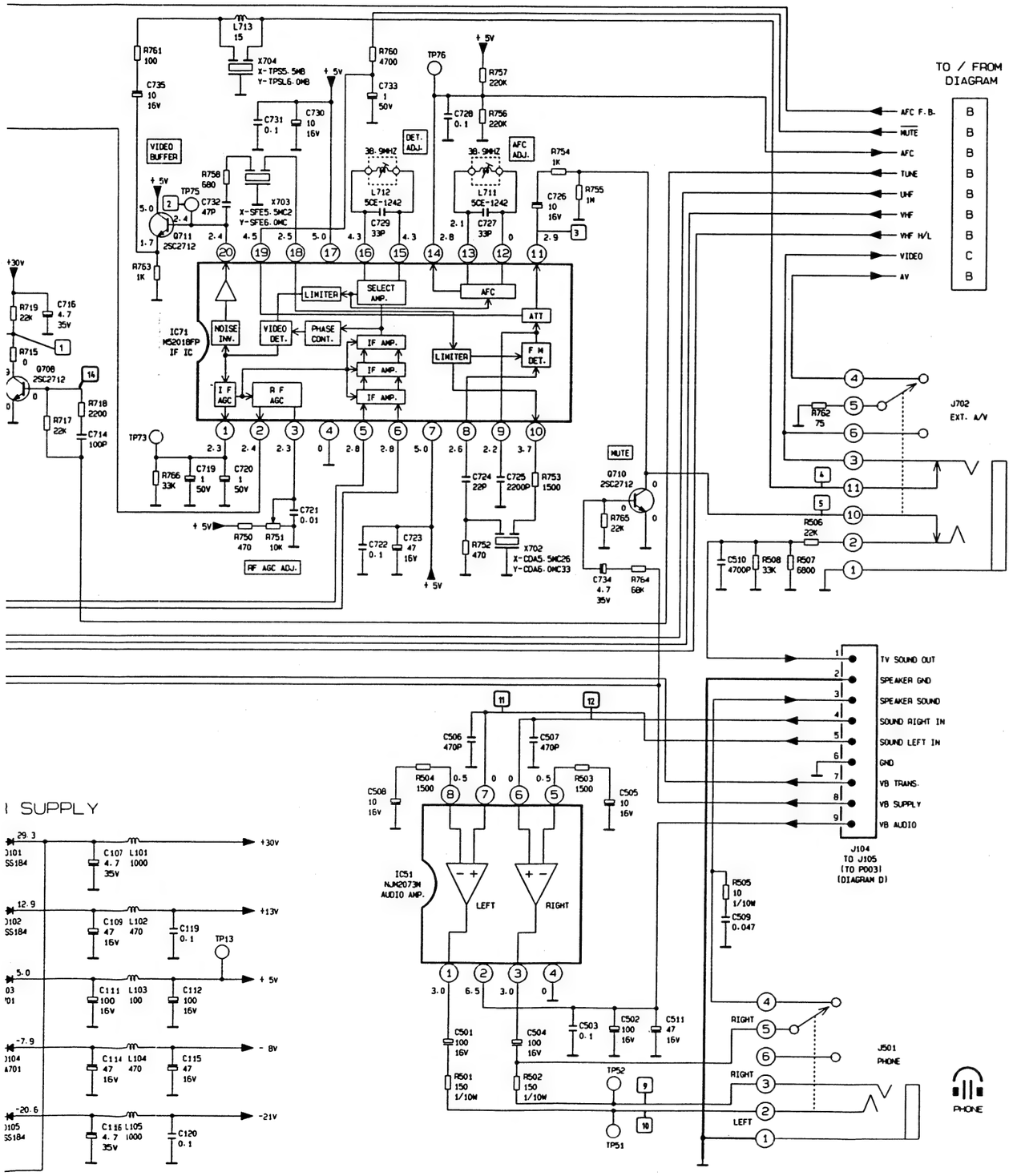

SUPPLY

RF, IF, Audio and Power Supply

A701 B2	L712 G2	TP51 H7
C101 B7	L713 F1	TP52 H7
C102 B7	Q101 C7	TP70 A5
C103 C5	Q701 C4	TP71 B3
C104 C8	Q702 C4	TP72 B3
C105 D7	Q703 D3	TP73 F3
C106 D8	Q704 D3	TP74 C4
C107 E8	Q705 C3	TP75 F2
C109 E8	Q706 D2	TP76 G2
C111 E8	Q707 E2	X701 D4
C112 F8	Q708 E3	X702 H4
C114 E7	Q709 D4	X703 F2
C115 F7	Q710 H4	X704 F2
C116 E7	Q711 F2	
C118 B7	Q712 C2	
C119 F6	R101 B7	
C120 F7	R102 B7	
C501 G7	R103 B7	
C502 H7	R104 B7	
C503 H7	R105 B7	
C504 H7	R106 A7	
C505 H5	R107 A7	
C506 G5	R108 A7	
C507 H5	R109 C5	
C508 G5	R110 B5	
C509 I6	R111 B5	
C510 I4	R112 C7	
C511 H7	R113 B6	
C701 C4	R501 G7	
C702 C4	R502 H7	
C703 D4	R503 H5	
C704 D4	R504 G5	
C705 B4	R505 I6	
C706 B4	R506 I4	
C707 B4	R507 I4	
C708 B3	R508 I4	
C709 B3	R702 C5	
C710 C3	R703 C4	
C711 D3	R704 C5	
C712 D3	R705 C4	
C713 E3	R706 D4	
C714 E3	R707 C4	
C715 C5	R708 C3	
C716 E3	R709 C4	
C717 D2	R710 D3	
C718 B2	R711 D3	
C719 F4	R712 D3	
C720 F4	R713 D3	
C721 F4	R714 E3	
C722 G4	R715 E3	
C723 G4	R717 E3	
C724 G4	R718 E3	
C725 H4	R719 E3	
C726 H2	R720 D4	
C727 G2	R731 D2	
C728 G2	R732 D2	
C729 G2	R733 E2	
C730 F2	R735 D2	
C731 F2	R736 D3	
C732 F2	R737 C2	
C733 G2	R738 C3	
C734 H4	R739 C2	
C735 F2	R740 C2	
C736 C3	R741 C2	
D101 E6	R742 C3	
D102 E6	R743 C2	
D103 E6	R745 B2	
D104 E7	R746 C2	
D105 E7	R747 B2	
D701 C2	R750 F4	
E701 B4	R751 F4	
IC11 B7	R752 G4	
IC71 F3	R753 H4	
IC51 G6	R754 H2	
J104 J6	R755 H2	
J402 C1	R756 G2	
J501 I7	R757 G2	
J701 B2	R758 F2	
J702 J4	R760 G1	
L101 E6	R761 F1	
L102 E6	R762 I3	
L103 E6	R763 F3	
L104 E7	R764 H4	
L105 E7	R765 H4	
L701 C4	R766 F4	
L702 B4	T101 D6	
L711 G2	TP13 F6	

WAVE FORMS FOR DIAGRAM A

1 C - Q708: 3.5V, 20V, 120µs

2 20 - IC71: 0.7V, 1.4V, 64µs

3 11 - IC71: 0V, 1.4V, 1000 Hz

4 11 - J702: 0.6V, 1.1V, 64µs

5 10 - J702: 0V, 1.4V, 1000 Hz

6 7 - IC11: 0.3V, 0.55V, 18µs

7 4 - IC11: 0.6V, 2.1V, 18µs

8 3 - T101: 9V, 15V, 18µs

9 3 - J501: 0V, 2V, 1000 Hz

10 2 - J501: 0V, 2V, 1000 Hz

11 5 - J104: 0V, 0.1V, 1000 Hz

12 4 - J104: 0V, 2V, 1000 Hz

13 1 - E701: 0V, 100mV, 64µs

14 B - Q708: 0V, 1.5V, 120µs

15 1 - IC11: 0V, 50mV, 17µs

16 6 - T101: 0V, 0.4V, 17µs

17 7 - T101: 0V, 80V, 17µs

18 1 - T101: 0V, 35V, 17µs

19 2 - T101: 0V, 15V, 17µs

20 5 - T101: 0V, 23V, 17µs

21 4 - T101: 0V, 60V, 17µs

03LC3150
CL 16532055/012
121191

Printdarstellung Print Layout

C101 A3 C802 B6 R102 B3 R753 D4 X703 E5
C102 B3 C803 B6 R103 B3 R754 C5 X704 D6
C103 A4 C804 B6 R104 B3 R755 C5 X801 C4
C104 B4 C805 B5 R105 B3 R756 D5 Z601 A7
C105 B3 C806 B5 R106 B3 R757 D5
C106 A2 C807 B5 R107 B3 R758 D5
C107 B4 C808 B6 R108 B3 R760 D6
C108 B4 C809 B5 R109 A4 R761 D6
C109 A4 C810 C6 R110 B4 R762 B2
C110 A4 C811 C5 R111 B4 R763 D5
C111 A2 C812 B5 R112 A3 R764 C2
C112 A2 C813 C6 R113 B4 R765 C2
C113 A2 C814 C5 R301 D7 R801 B5
C114 B2 C815 C5 R302 D7 R802 B5
C115 B2 C816 C5 R303 D7 R803 B5
C116 B3 C817 C5 R304 D6 R804 B6
C117 B4 C818 C4 R501 A1 R805 B6
C118 B3 C819 C4 R502 A2 R806 B6
C119 A4 C820 B4 R503 B2 R807 B5
C120 B3 C821 B5 R504 C2 R808 B6
C301 D7 C822 C5 R505 B2 R809 B6
C302 D6 C823 B5 R506 C1 R810 B6
C501 D1 C824 B4 R507 C1 R811 C6
C502 B2 C825 A5 R508 C1 R812 C5
C503 C1 C826 B4 R601 A5 R813 B4
C504 C1 C827 B5 R602 A5 R814 B5
C505 A2 C828 B5 R603 A5 R815 B4
C506 B2 C829 B5 R605 A6 R816 C5
C507 C2 C830 C5 R606 A5 R817 C5
C508 D1 D101 A4 R607 A5 R818 C5
C509 B2 D102 B3 R609 B7 R819 C5
C510 A2 D103 A3 R610 B7 R820 B5
C511 A1 D104 A2 R611 A7 R821 C5
C601 A6 D105 B3 R612 B7 R822 B4
C602 B6 D106 E6 R613 A7 R823 B4
C603 B6 D301 D7 R614 A7 R824 B4
C609 E6 D601 B7 R615 A7 R825 B4
C610 A6 D602 B7 R616 A6 R826 A4
C612 D6 D603 B6 R617 B7 R827 A4
C613 B7 D701 D1 R618 C7 R828 B5
C656 C7 E701 D3 R620 A7 R829 B5
C657 C6 F101 E6 R621 A7 R830 B5
C658 B7 FL81 C6 R631 B6 R831 A5
C659 B7 FL82 C6 R632 B6 R832 B5
C660 B7 IC11 A3 R633 B6 R833 B5
C661 B7 IC31 E7 R634 B6 R834 B6
C662 B7 IC51 C1 R635 C7 R835 B6
C663 C7 IC61 B7 R636 C7 R837 B6
C664 C7 IC62 A7 R637 C7 R838 B6
C665 A7 IC71 D4 R638 C7 R840 C5
C701 D3 IC81 B5 R656 B7 R841 B6
C702 E4 J102 E7 R702 D3 R842 B6
C703 E4 J104 A2 R703 E3 R843 B6
C704 D4 J402 E2 R704 D4 R844 B5
C705 D3 J501 A1 R705 E4 R845 B6
C706 D3 J601 A5 R706 D4 R846 B6
C707 D3 J701 D1 R707 D3 R847 B6
C708 D2 J702 B1 R708 C7 R848 A6
C709 D2 J801 A4 R709 C7 R849 A6
C710 D2 L101 B4 R710 C7 R850 A5
C711 D6 L102 B4 R711 C7 R851 A5
C712 D7 L103 A2 R712 D6 R854 C4
C713 D7 L104 B2 R713 D7 R855 C4
C714 C7 L105 B3 R714 D7 R856 C4
C715 E4 L601 A5 R715 D7 R857 C5
C716 C6 L701 E4 R717 C7 R858 C5
C717 E2 L702 D3 R718 D7 T101 B3
C718 D2 L711 D5 R719 D7 TP13 A2
C719 E6 L712 D5 R720 D7 TP31 D7
C720 D6 L713 C6 R731 D7 TP61 A1
C721 E4 Q101 A3 R732 D6 TP62 B1
C722 D4 Q601 B7 R733 D7 TP62 A6
C723 C4 Q602 A7 R735 D3 TP63 A7
C724 D5 Q603 A7 R736 D3 TP64 A7
C725 D4 Q701 E4 R737 D2 TP70 D4
C726 D5 Q702 C7 R738 D2 TP71 D2
C727 D5 Q703 C7 R739 D3 TP72 D2
C728 D5 Q704 C7 R740 D3 TP73 E4
C729 D5 Q705 D2 R741 D3 TP74 D3
C730 E5 Q706 D6 R742 D2 TP75 D5
C731 D5 Q707 D7 R743 D3 TP76 D5
C732 D5 Q708 D7 R745 D2 TP78 B1
C733 E6 Q709 D6 R746 D1 TP81 A5
C734 C1 Q710 D6 R747 D1 X601 A6
C735 D6 Q711 D5 R750 D4 X602 A7
C736 D2 Q712 D2 R751 E4 X701 D4
C801 B5 R101 A3 R752 D5 X702 C5

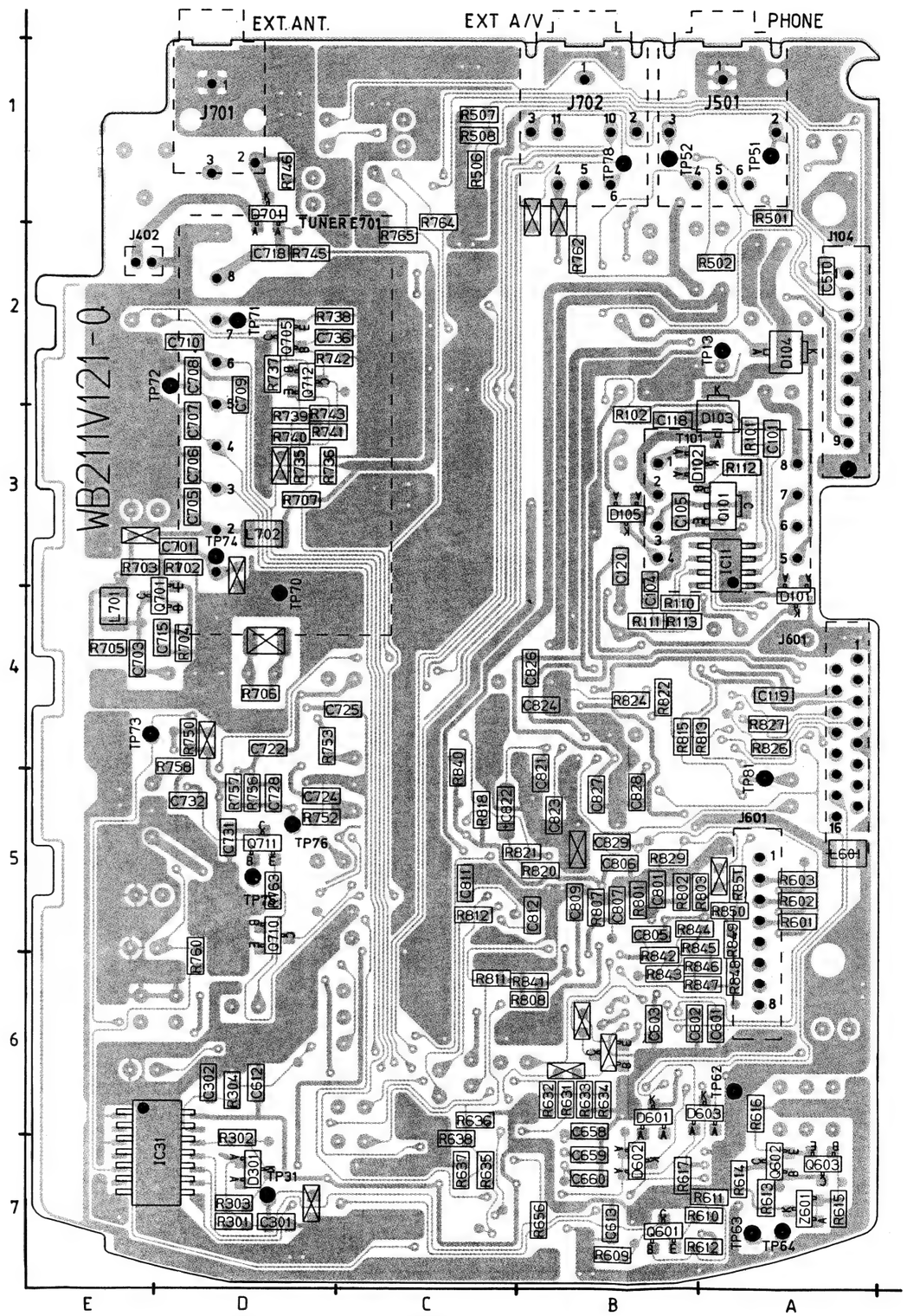

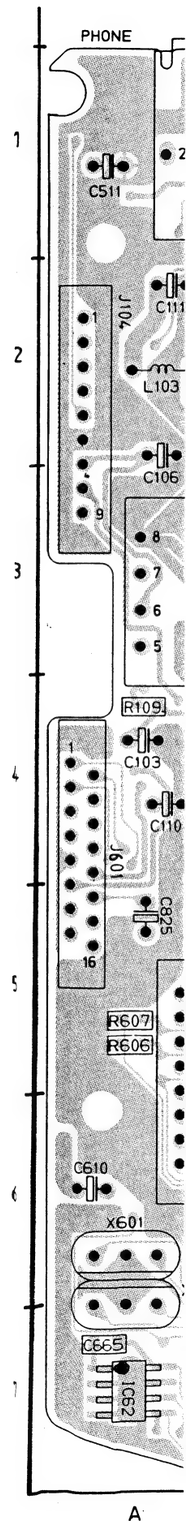

Print Layout Dessins platine

3 E6
4 D6
1 C4
1 A7

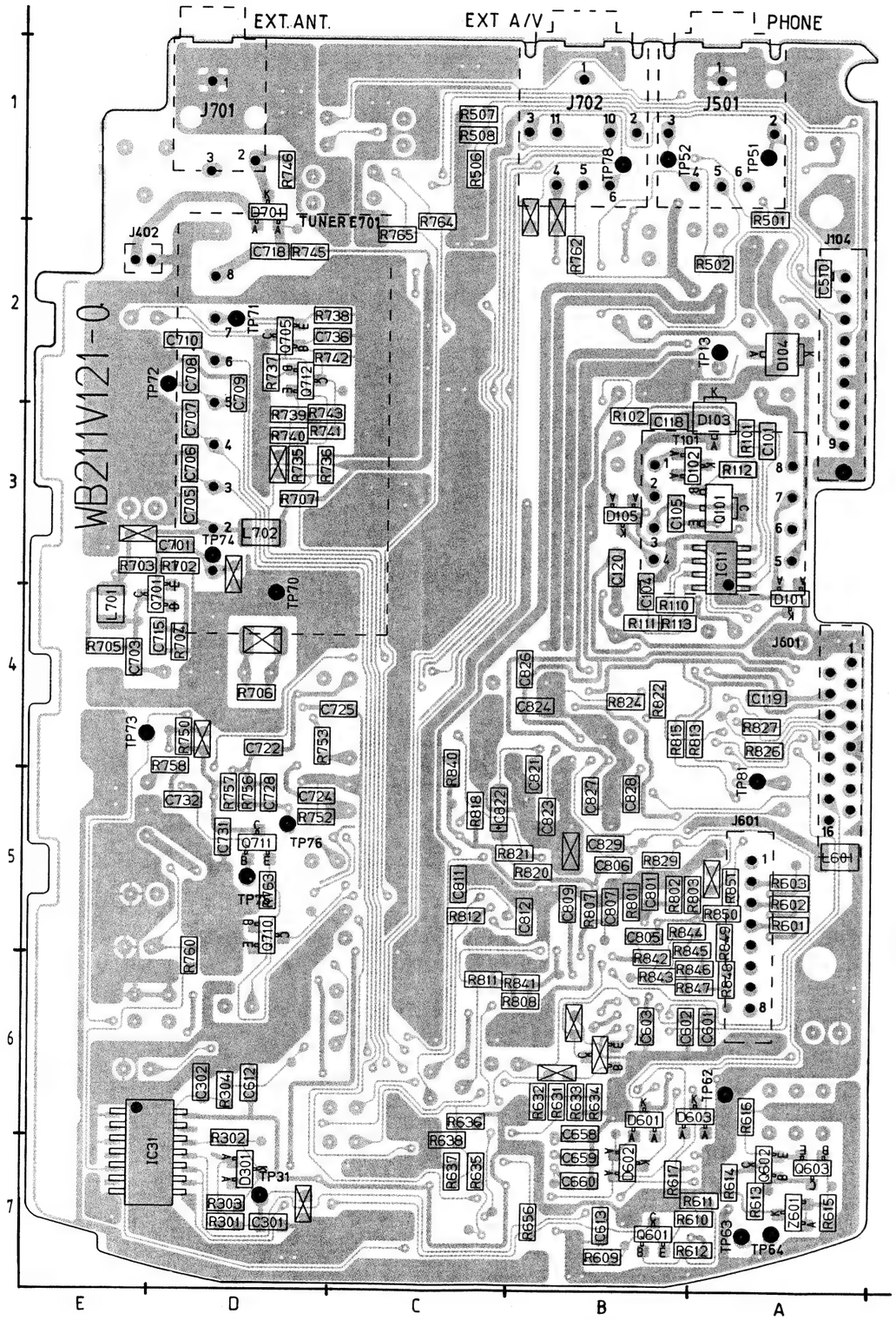
EXT.ANT.
EXT A/V
PHONE
J701
J702
J501
J402
J104
J601
TUNER E701
WB211V121-0
IC31
L702
L701
Q701
Q705
Q712
Q711
Q710
Q601
Q602
Q603
D701
D702
D104
D103
D102
D101
D105
D601
D602
D603
IC101
T101
TP71
TP72
TP73
TP74
TP70
TP76
TP31
TP78
TP52
TP51
TP13
TP81
TP62
TP63
TP64
R507
R508
R506
R746
R764
R765
R762
R501
R502
R738
R736
R742
R739
R743
R740
R741
R735
R707
R703
R702
R705
R706
R750
R758
R757
R753
R722
R724
R752
R732
R731
R728
R760
R763
R102
R101
R112
R110
R111
R113
R824
R822
R827
R826
R840
R818
R821
R820
R812
R811
R841
R808
R829
R844
R845
R842
R846
R843
R847
R848
R850
R851
R602
R803
R805
R503
R602
R601
R632
R633
R634
R636
R638
R637
R635
R616
R614
R613
R611
R610
R612
R609
R615
R617
C710
C708
C709
C707
C706
C705
C701
C715
C703
C725
C722
C732
C731
C718
C736
C737
C735
C739
C740
C734
C733
C730
C729
C727
C726
C722
C721
C720
C719
C717
C716
C714
C713
C712
C711
C710
C609
C608
C607
C606
C605
C604
C603
C602
C601
C826
C824
C827
C825
C823
C822
C821
C837
C828
C829
C806
C807
C801
C811
C812
C809
C805
C118
C105
C120
C104
C119
C101
C102
C103
C106
C107
C108
C109
C110
C111
C112
C113
C114
C115
C116
C117
C504
C501
C508
C503
C502
C509
C506
C507
C505
C510
C511
C512
C513
C514
C515
C516
C517
C518
C519
C520
C521
C522
C523
C524
C525
C526
C527
C528
C529
C530
C531
C532
C533
C534
C535
C536
C537
C538
C539
C540
C541
C542
C543
C544
C545
C546
C547
C548
C549

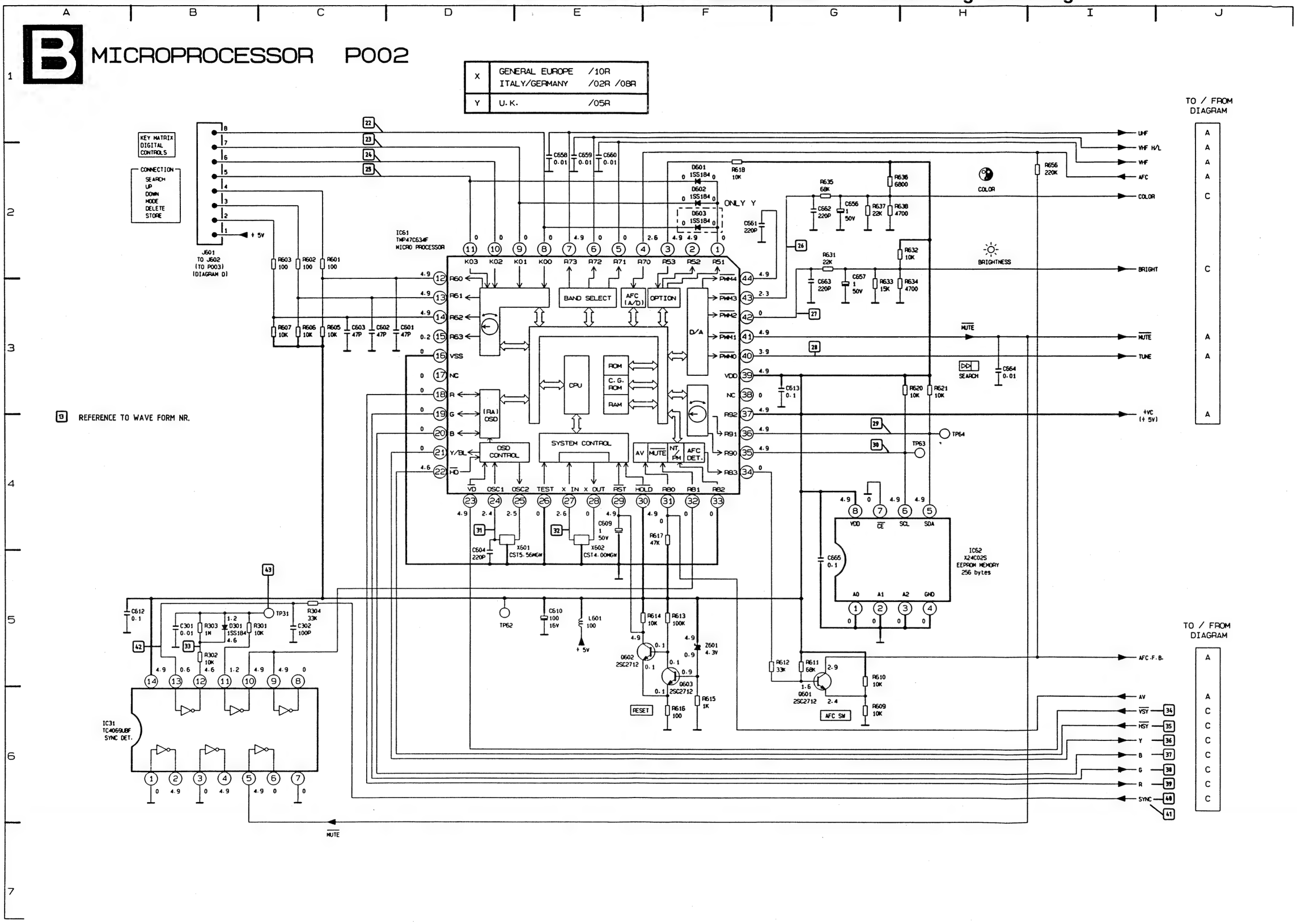

Contr

C301 B5
C302 C5
C601 D3
C602 C3
C603 C3
C604 D5
C609 E4
C610 E5
C612 A5
C613 G3
C656 G2
C657 G3
C658 E2
C659 E2
C660 E2
C661 F2
C662 G2
C663 G3
C664 H3
C665 G5
D601 F2
D602 F2
D603 F2
D301 B5
IC31 B6
IC61 F2
IC62 G5
J601 B2
L601 E5
Q603 F6
Q601 G6
Q602 F5
R301 B5
R302 B5
R303 B5
R304 C5
R601 C3
R602 C3
R603 C3
R605 C3
R606 C3
R607 C3
R609 G6
R610 G6
R611 G5
R612 G5
R613 F5
R614 F5
R615 F6
R616 F6
R617 F5
R618 F2
R620 H3
R621 H3
R631 G3
R632 H2
R633 G3
R634 H3
R635 G2
R636 G2
R637 G2
R638 G2
R656 I2
TP31 C5
TP62 D5
TP63 H4
TP64 H4
X601 D5
X602 E5
Z601 F5

Bedienung Bediening

Controls La commande

AL EUROPE	/10R
/GERMANY	/02R /08R
	/05R

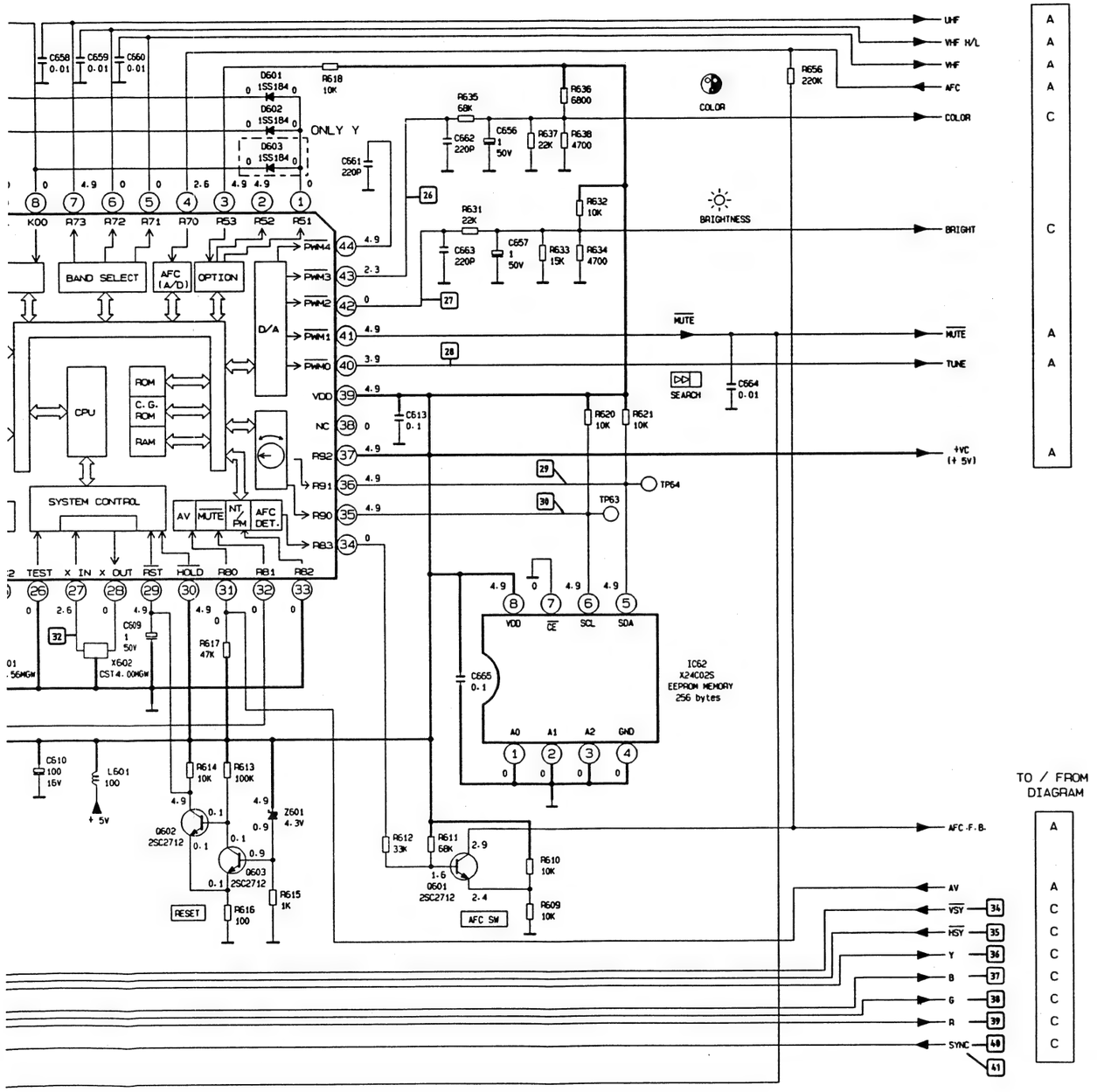

C301 B5
C302 C5
C601 D3
C602 C3
C603 C3
C604 D5
C609 E4
C610 E5
C612 A5
C613 G3
C656 G2
C657 G3
C658 E2
C659 E2
C660 E2
C661 F2
C662 G2
C663 G3
C664 H3
C665 G5
D601 F2
D602 F2
D603 F2
D301 B5
IC31 B6
IC61 F2
IC62 G5
J601 B2
L601 E5
Q603 F6
Q601 G6
Q602 F5
R301 B5
R302 B5
R303 B5
R304 C5
R601 C3
R602 C3
R603 C3
R605 C3
R606 C3
R607 C3
R609 G6
R610 G6
R611 G5
R612 G5
R613 F5
R614 F5
R615 F6
R616 F6
R617 F5
R618 F2
R620 H3
R621 H3
R631 G3
R632 H2
R633 G3
R634 H3
R635 G2
R636 G2
R637 G2
R638 G2
R656 I2
TP31 C5
TP62 D5
TP63 H4
TP64 H4
X601 D5
X602 E5
Z601 F6

WAVE FORMS FOR DIAGRAM B

22 8 - J601: 0V, 0.4V, 200ms
32 27 - IC61: 5V, 0.25µs
42 13 - IC31: -0.2V, 5V, 20ms
23 7 - J601: 0V, 0.4V, 150ms
33 R302/R303: -4.5V, 4.8V, 20ms
43 TP 31: 0.8V, 0.6V, 20ms
24 6 - J601: 0V, 0.4V, 190ms
34 31 - IC61: 0V, 5.8V, 20ms
25 5 - J601: 0V, 0.4V, 190ms
35 23 - IC61: -5V, 5.5V, 64µs
26 43 - IC61: -2.3V, 5.5V, 30µs
36 21 - IC61: 0V, 5.5V, 20ms
27 42 - IC61: -2.5V, 5.5V, 30µs
37 20 - IC61: 0V, 7V, 20ms
28 40 - IC61: -5.5V, 5.5V, 125µs
38 19 - IC61: 0V, 7V, 20ms
29 36 - IC61: 0V, 2.5V, 6ms
39 18 - IC61: 0V, 7V, 20ms
30 35 - IC61: 0V, 2.5V, 6ms
40 21 - IC81: -0.4V, 5.1V, 64µs
31 24 - IC61: -2V, 6V, 64µs
41 21 - IC81: -0.4V, 5.1V, 20ms

03LC3150
CL 16532055/013
121191

Printdarstellung Print Layout

C101 A3 C802 B6 R102 B3 R753 D4 X703 E5
C102 B3 C803 B6 R103 B3 R754 C5 X704 D6
C103 A4 C804 B6 R104 B3 R755 C5 X801 C4
C104 B4 C805 B5 R105 B3 R756 D5 Z601 A7
C105 B3 C806 B5 R106 B3 R757 D5
C106 A2 C807 B5 R107 B3 R758 D5
C107 B4 C808 B6 R108 B3 R760 D6
C108 B4 C809 B5 R109 A4 R761 D6
C109 A4 C810 C6 R110 B4 R762 B2
C110 A4 C811 C5 R111 B4 R763 D5
C111 A2 C812 B5 R112 A3 R764 C2
C112 A2 C813 C6 R113 B4 R765 C2
C113 A2 C814 C5 R301 D7 R801 B5
C114 B2 C815 C5 R302 D7 R802 B5
C115 B2 C816 C5 R303 D7 R803 B5
C116 B3 C817 C5 R304 D6 R804 B6
C117 B4 C818 C4 R501 A1 R805 B6
C118 B3 C819 C4 R502 A2 R806 B6
C119 A4 C820 B4 R503 B2 R807 B5
C120 B3 C821 B5 R504 C2 R808 B6
C301 D7 C822 C5 R505 B2 R809 B6
C302 D6 C823 B5 R506 C1 R810 B6
C501 D1 C824 B4 R507 C1 R811 C6
C502 B2 C825 A5 R508 C1 R812 C5
C503 C1 C826 B4 R601 A5 R813 B4
C504 C1 C827 B5 R602 A5 R814 B5
C505 A2 C828 B5 R603 A5 R815 B4
C506 B2 C829 B5 R606 A6 R816 C5
C507 C2 C830 C5 R606 A5 R817 C5
C508 D1 D101 A4 R607 A5 R818 C5
C509 B2 D102 B3 R609 B7 R819 C5
C510 A2 D103 A3 R610 B7 R820 B5
C511 A1 D104 A2 R611 A7 R821 C5
C601 A6 D105 B3 R612 B7 R822 B4
C602 B6 D106 E6 R613 A7 R823 B4
C603 B6 D301 D7 R614 A7 R824 B4
C609 E6 D601 B7 R615 A7 R825 B4
C610 A6 D602 B7 R616 A6 R826 A4
C612 D6 D603 B6 R617 B7 R827 A4
C613 B7 D701 D1 R618 C7 R828 B6
C656 C7 E701 D3 R620 A7 R829 B5
C657 C6 F101 E6 R621 A7 R830 B5
C658 B7 FL81 C8 R631 B6 R831 A5
C659 B7 FL82 C6 R632 B6 R832 B5
C660 B7 IC11 A3 R633 B6 R833 B5
C661 B7 IC31 E7 R634 B6 R834 B6
C662 B7 IC51 C1 R635 C7 R835 B6
C663 C7 IC61 B7 R636 C7 R837 B6
C664 C7 IC62 A7 R637 C7 R838 B6
C665 A7 IC71 D4 R638 C7 R840 C5
C701 D3 IC81 B5 R656 B7 R841 B6
C702 E4 J102 E7 R702 D3 R842 B6
C703 E4 J104 A2 R703 E3 R843 B6
C704 D4 J402 E2 R704 D4 R844 B5
C705 D3 J601 A1 R705 E4 R845 B6
C706 D3 J601 A5 R706 D4 R846 B6
C707 D3 J701 D1 R707 D3 R847 B6
C708 D2 J702 B1 R708 C7 R848 A6
C709 D2 J801 A4 R709 C7 R849 A6
C710 D2 L101 B4 R710 C7 R850 A5
C711 D6 L102 B4 R711 C7 R851 A5
C712 D7 L103 A2 R712 D6 R854 C4
C713 D7 L104 B2 R713 D7 R855 C4
C714 C7 L105 B3 R714 D7 R856 C4
C715 E4 L601 A5 R715 D7 R857 C5
C716 C6 L701 E4 R717 C7 R858 C5
C717 E2 L702 D3 R718 D7 T101 B3
C718 D2 L711 D5 R719 D7 TP13 A2
C719 E6 L712 D5 R720 D7 TP31 D7
C720 D6 L713 C6 R731 D7 TP51 A1
C721 E4 Q101 A3 R732 D6 TP62 B1
C722 D4 Q601 B7 R733 D7 TP62 A6
C723 C4 Q602 A7 R735 D3 TP63 A7
C724 D5 Q603 A7 R736 D3 TP64 A7
C725 D4 Q701 E4 R737 D2 TP70 D4
C726 D5 Q702 C7 R738 D2 TP71 D2
C727 D5 Q703 C7 R739 D3 TP72 D2
C728 D5 Q704 C7 R740 D3 TP73 E4
C729 D5 Q705 D2 R741 D3 TP74 D3
C730 E5 Q706 D6 R742 D2 TP75 D5
C731 D5 Q707 D7 R743 D3 TP76 D5
C732 D5 Q708 D7 R745 D2 TP78 B1
C733 E6 Q709 D6 R746 D1 TP81 A5
C734 C1 Q710 D6 R747 D1 X601 A6
C735 D6 Q711 D5 R750 D4 X602 A7
C736 D2 Q712 D2 R751 E4 X701 D4
C801 B5 R101 A3 R752 D5 X702 C5

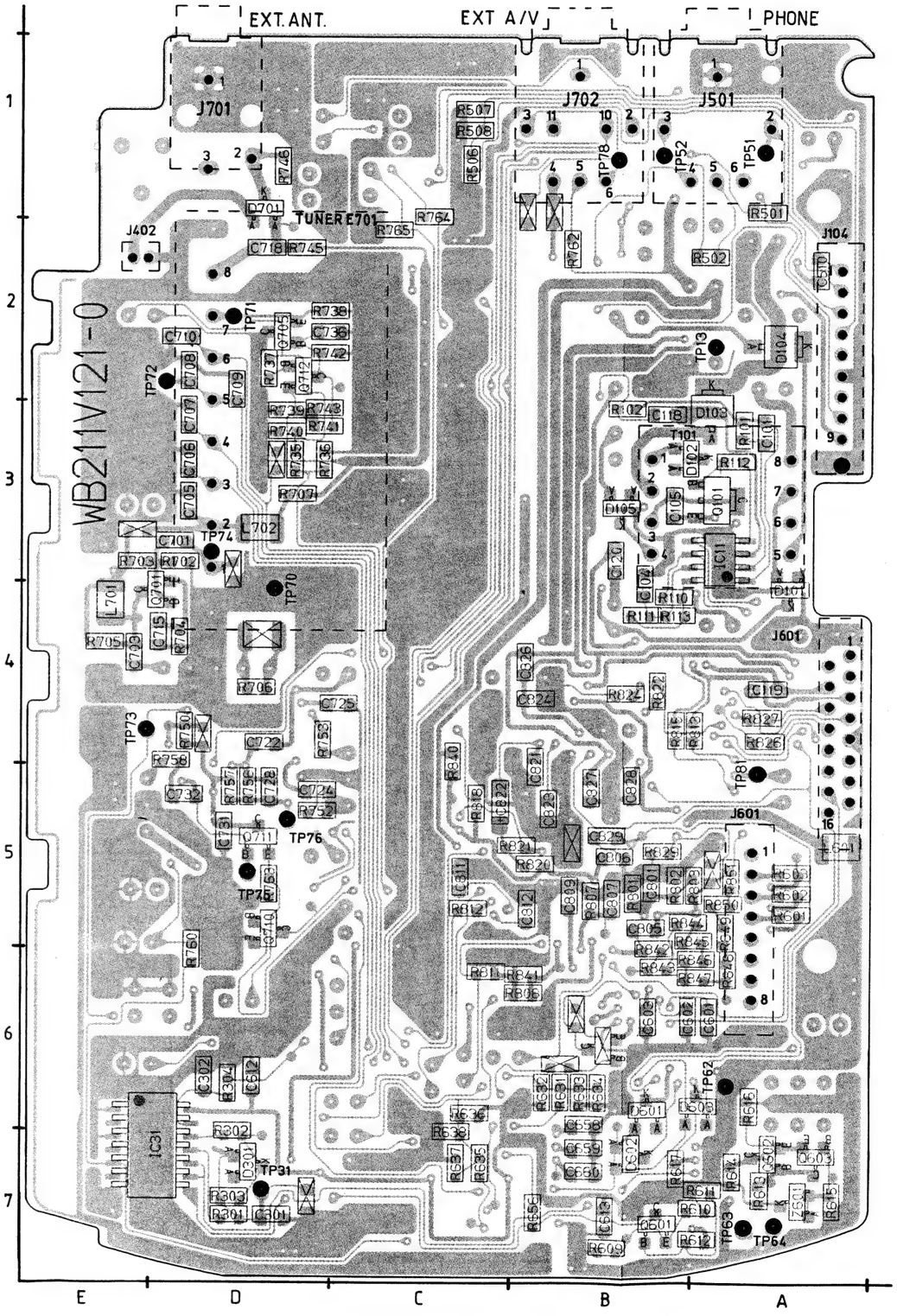

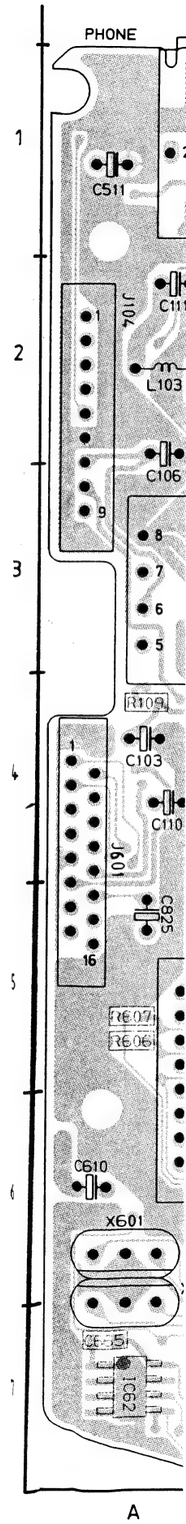

Print Layout Dessins platine

3 E5
4 D6
1 C4
1 A7

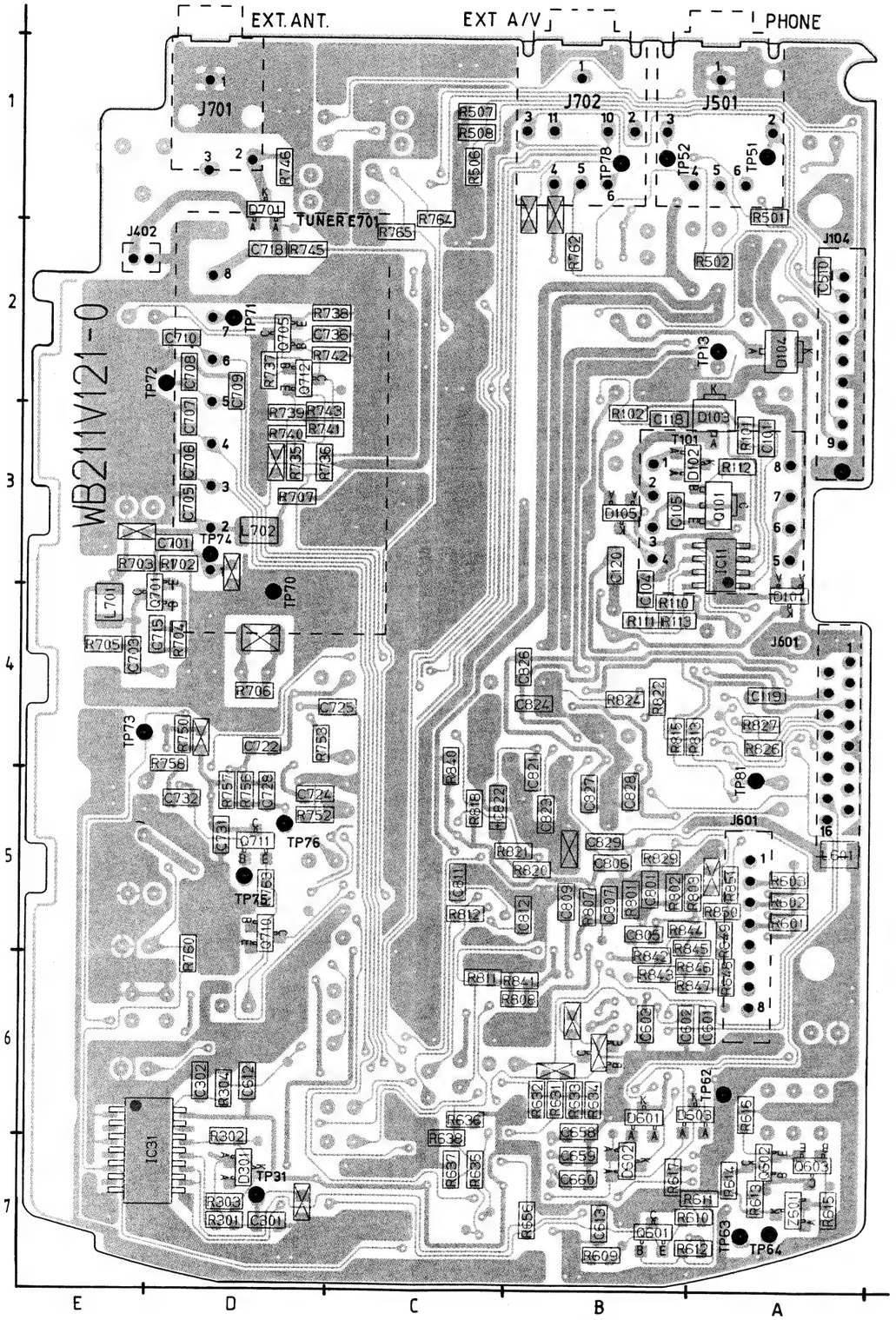

Printdarstellung Print Layout

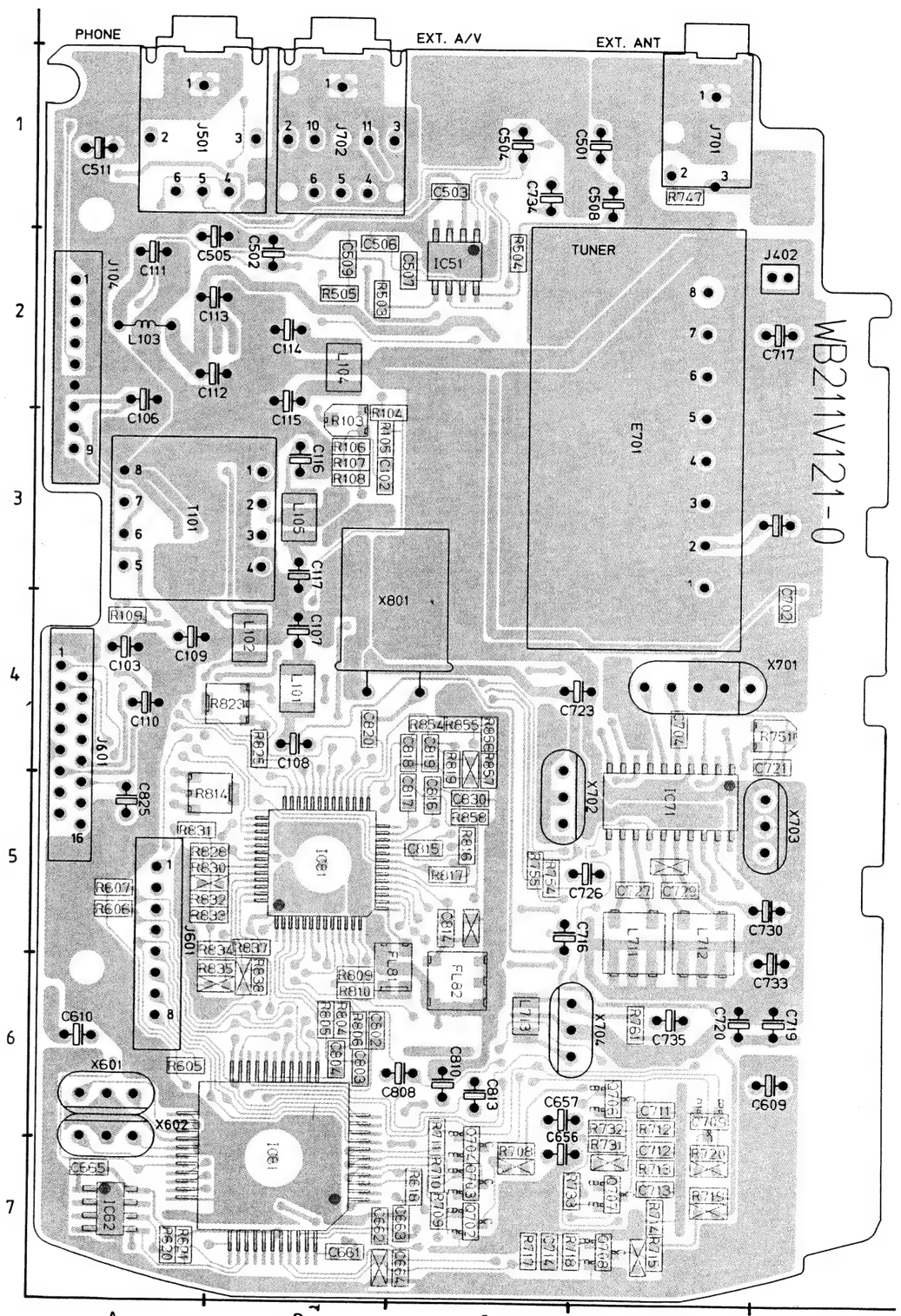

CHROMA BLOCK P002 AND LCD PANEL PL31

P.C. BOARD P002

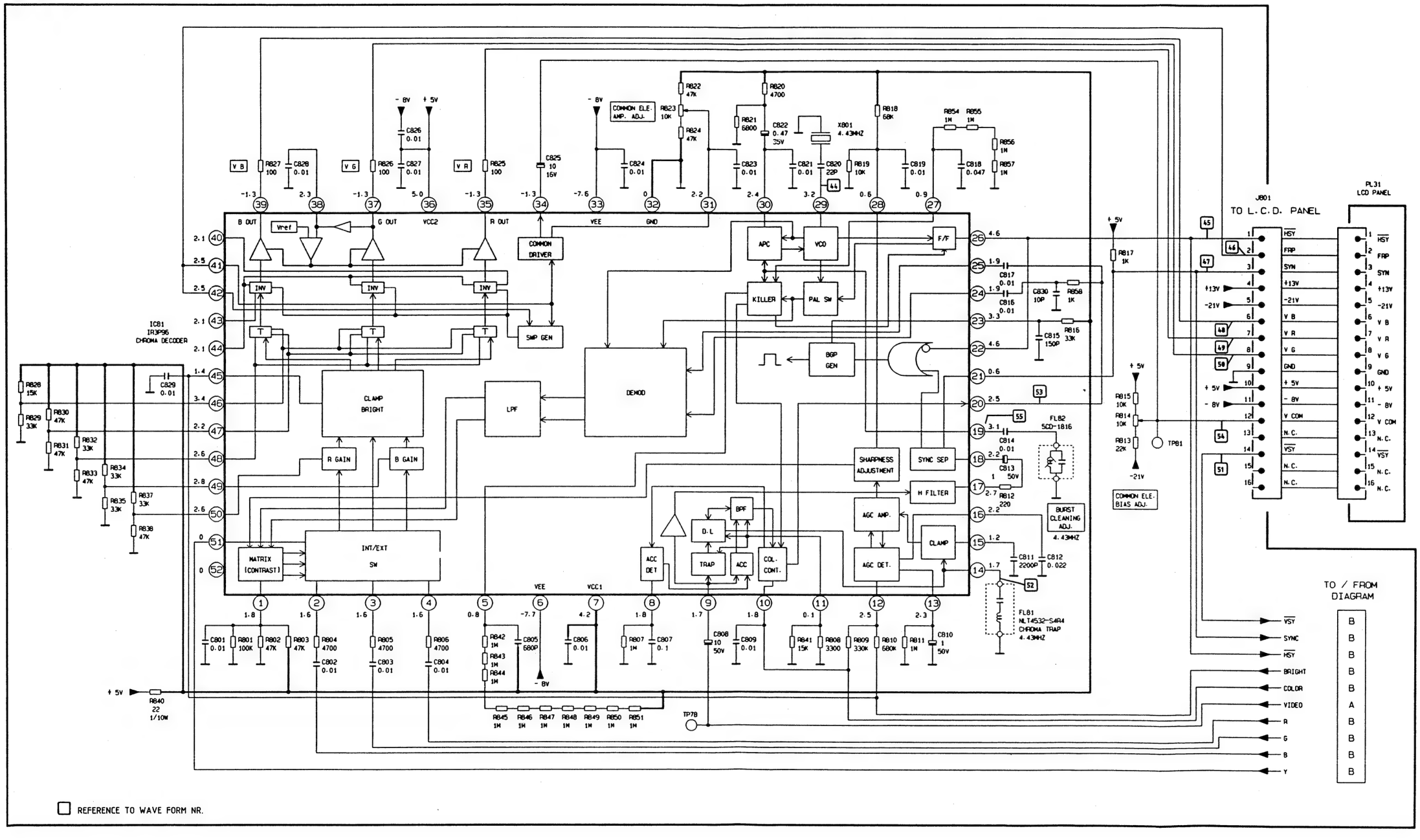

☐ REFERENCE TO WAVE FORM NR.

C801 B5 R857 H2
C802 C6 R858 H3
C803 C6 TP78 F6
C804 D6 TP81 I4
C805 D5 X801 F2
C806 E5 voor
C807 E5 schema C
C808 F5
C809 F5
C810 G5
C811 H5
C812 H5
C813 H4
C814 H4
C815 H3
C816 H3
C817 H3
C818 G2
C819 G2
C820 F2
C821 F2
C822 F2
C823 F2
C824 E2
C825 D2
C826 C2
C827 C2
C828 C2
C829 B4
C830 H3
EX03 J4
FL81 H5
FL82 H4
IC81 C5
J801 I4
R801 B5
R802 C5
R803 C5
R804 C5
R805 C5
R806 D5
R807 E5
R808 F5
R809 G5
R810 G5
R811 G5
R812 H4
R813 I4
R814 I4
R815 I4
R816 H3
R817 H3
R818 G2
R819 G2
R820 F2
R821 F2
R822 E2
R823 E2
R824 E2
R825 D2
R826 C2
R827 C2
R828 A4
R829 A4
R830 A4
R831 A4
R832 A4
R833 A4
R834 A4
R835 A5
R837 B5
R838 B5
R840 B6
R841 F5
R842 D5
R843 D6
R844 D6
R845 D6
R846 D6
R847 D6
R848 E6
R849 E6
R850 E6
R851 E6
R854 G2
R855 G2
R856 H2

Chrominanz Chroma

E F G H I J

PANEL PL31

P.C. BOARD P002

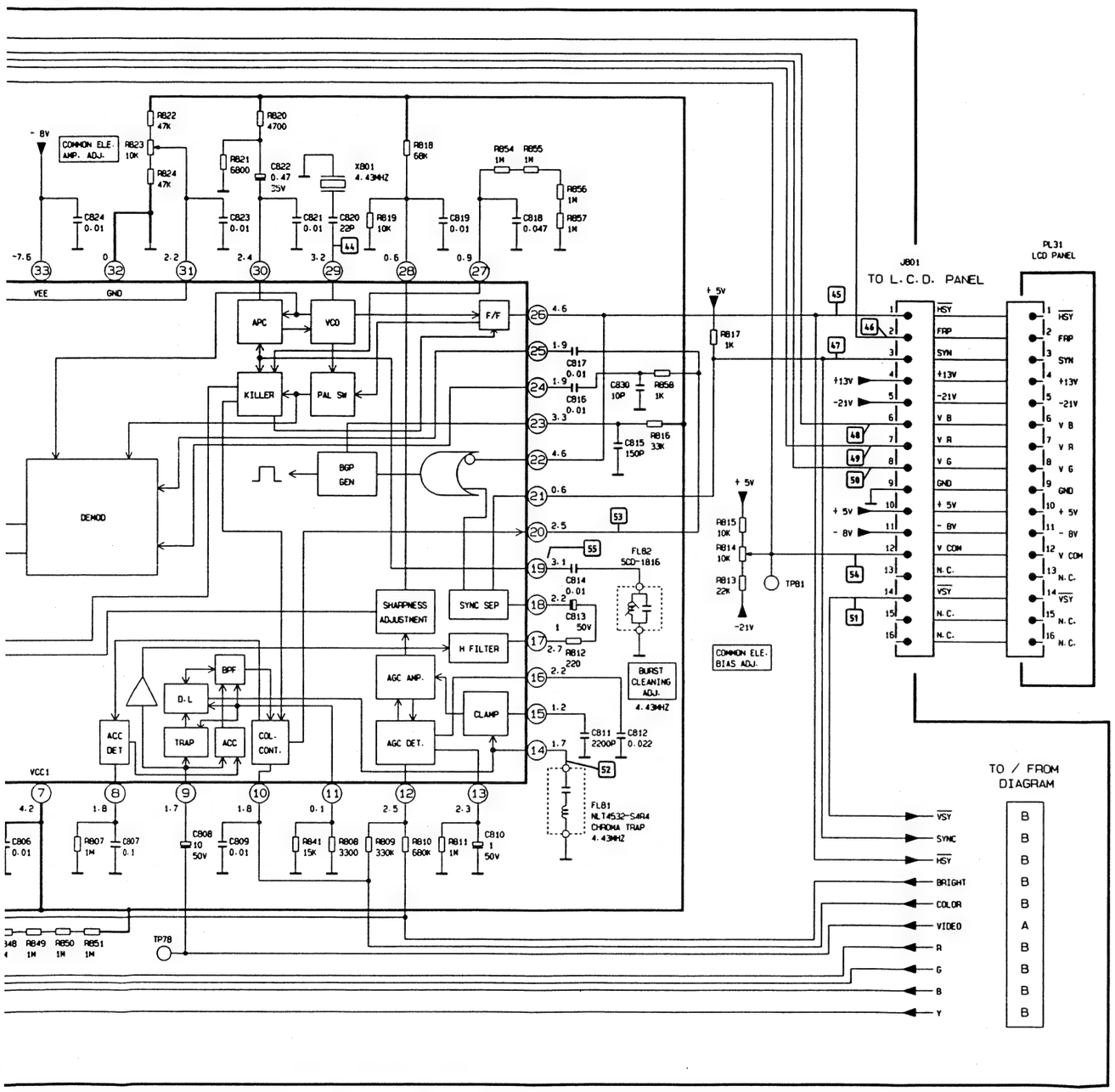

Chroma Chrome

C801 B5 R857 H2
C802 C6 R858 H3
C803 C6 TP78 F6
C804 D6 TP81 I4
C805 D5 X801 F2
C806 E5 voor
C807 E5 schema C
C808 F5
C809 F5
C810 G5
C811 H5
C812 H5
C813 H4
C814 H4
C815 H3
C816 H3
C817 H3
C818 G2
C819 G2
C820 F2
C821 F2
C822 F2
C823 F2
C824 E2
C825 D2
C826 C2
C827 C2
C828 C2
C829 B4
C830 H3
EX03 J4
FL81 H5
FL82 H4
IC81 C5
J801 I4
R801 B5
R802 C5
R803 C5
R804 C5
R805 C5
R806 D5
R807 E5
R808 F5
R809 G5
R810 G5
R811 G5
R812 H4
R813 I4
R814 I4
R815 I4
R816 H3
R817 H3
R818 G2
R819 G2
R820 F2
R821 F2
R822 E2
R823 E2
R824 E2
R825 D2
R826 C2
R827 C2
R828 A4
R829 A4
R830 A4
R831 A4
R832 A4
R833 A4
R834 A4
R835 A5
R837 B5
R838 B5
R840 B6
R841 F5
R842 D5
R843 D6
R844 D6
R845 D6
R846 D6
R847 D6
R848 E6
R849 E6
R850 E6
R851 E6
R854 G2
R855 G2
R856 H2

WAVE FORMS FOR DIAGRAM C

44 29 - IC81
0.3V, 0.5V, 64µs

54 12 - J801
-2V, 4V, 130µs

45 26 - IC81
0V, 5.8V, 20ms

55 19 - IC81
0V, 0.8V, 64µs

46 2 - J801
-2.7V, 5.5V, 125µs

47 3 - J801
-0.4V, 5.1V, 64µs

48 6 - J801
0V, 7V, 120µs

49 7 - J801
0V, 7V, 120µs

50 8 - J801
0V, 7V, 120µs

51 14 - J80
0V, 5.8V, 20ms

52 14 - IC81
-0.2V, 300mV, 64µs

53 20 - IC81
0V, 0.1V, 64µs

03LC3150
CL 16532055/014
121191

Printdarstellung Print Layout

C121 F1
C202 G6
C203 F6
C204 F1
C401 H6
C402 H6
C403 G7
C404 I7
C405 H7
C406 H7
C407 H7
C408 H7
C409 H7
C410 I7
C411 J7
C412 I7
C413 H7
C414 I7
C415 I7
C416 I7
C417 I6
C418 I6
C419 I6
C420 I6
C421 H6
C422 H6
C423 I6
C424 H6
C425 H6
C426 J6
C427 I6
C428 I6
C429 I6
C430 I6
C431 J6
C432 J6
C433 I5
C434 G7
C435 I5
C436 I5
C437 I5
C609 E6
C702 E4
C703 E4
C715 E4
C717 E2
C719 E6
C721 E4
C730 E5
C733 E6
D106 E6
D107 F7
D108 F7
D401 F6
D402 F7
D403 I6
D404 I6
D405 H6
D406 I5
D501 F2
D605 I1
D606 I1
D607 I3
F101 E6
F102 F6
IC31 E7
IC41 H6
J101 F7
J102 E7
J105 F2
J401 H6
J402 E2
J502 G1
J602 F5
L106 F1
L201 F6
L401 H6
L402 I6
L403 H6
L404 I6
L701 E4
Q201 G6
Q202 G6
Q203 F2
Q401 F7
Q701 E4
R121 F7
R122 F7
R123 F7
R124 F7
R125 G7
R126 F3
R127 F3
R201 F6
R202 G6
R203 F2
R401 H6
R402 F6
R403 F7
R404 G7
R406 H7
R408 I6
R409 I6
R410 I6
R411 I6
R412 H6
R413 I6
R414 I5
R415 I6
R416 I5
R417 F7
R418 I7
R419 I7
R420 I7
R421 I7
R422 I7
R609 F3
R611 I8
R703 E3
R705 E4
R751 E4
S101 G7
S401 H8
S601 J3
S602 J5
S603 J4
S604 J4
S605 J1
S606 J2
T201 G6
TP17 F7
TP18 F6
TP18 F7
TP23 H1
TP24 H6
TP41 H6
TP42 H6
TP43 H8
TP44 G8
TP45 G7
TP46 F7
TP47 H6
TP53 G8
TP54 G7
TP73 E4
X401 H6
X402 H7
X403 G7
X404 G7
X405 G7
X406 H7
X703 E6
Z401 F7
Z402 I7

Print Layout Dessins platine

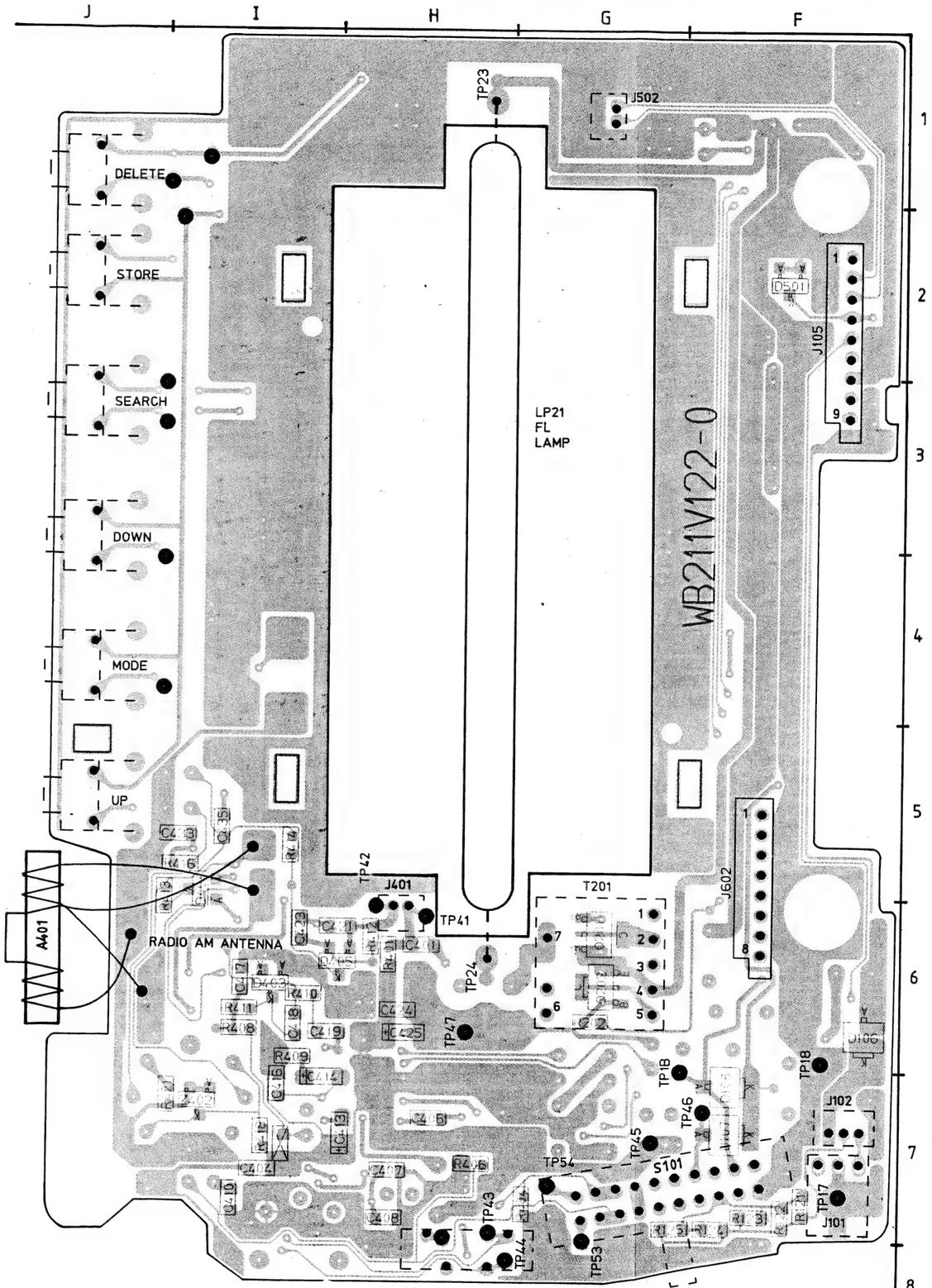

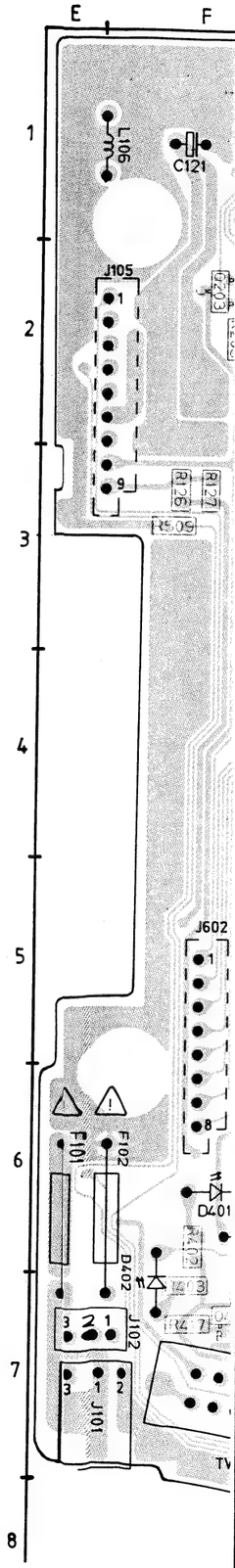

Print Layout Dessins platine

Printdarstellung Print Layout

22 F7
23 F7
24 F7
25 G7
26 F3
27 F3
01 F6
02 G6
03 F2
01 H6
02 F6
03 F7
04 G7
06 H7
08 I6
09 I6
10 I6
11 I6
12 H6
13 I6
14 I5
15 I6
16 I5
17 F7
18 I7
19 I7
20 I7
21 I7
22 I7
09 F3
11 I8
03 E3
05 E4
51 E4
01 G7
01 H8
01 J3
02 J5
03 J4
04 J4
05 J1
06 J2
01 G6
17 F7
18 F6
18 F7
23 H1
24 H6
41 H6
42 H6
43 H8
44 G8
45 G7
46 F7
47 H6
53 G8
54 G7
73 E4
01 H6
02 H7
03 G7
04 G7
05 G7
06 H7
03 E5
01 F7
02 I7

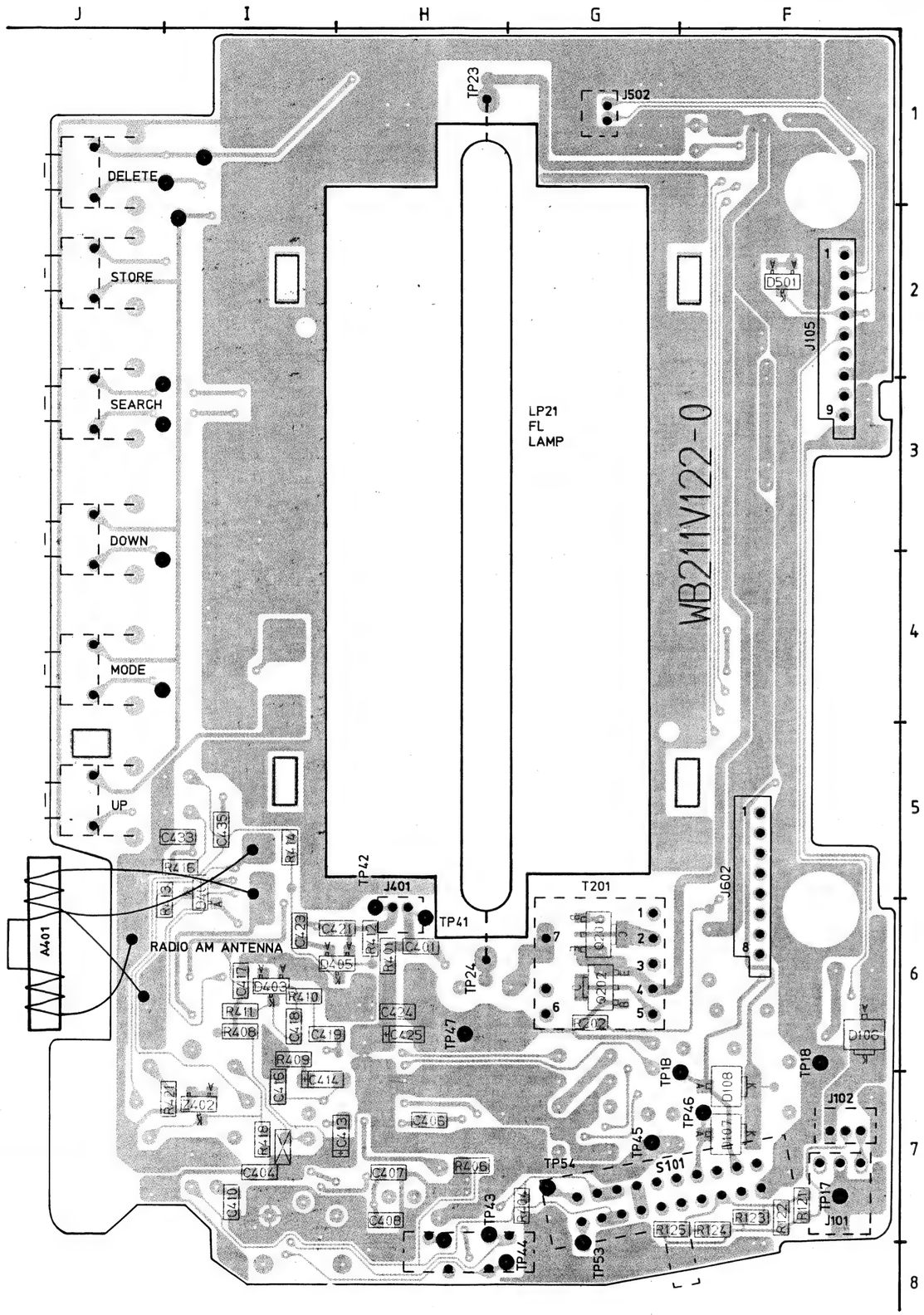

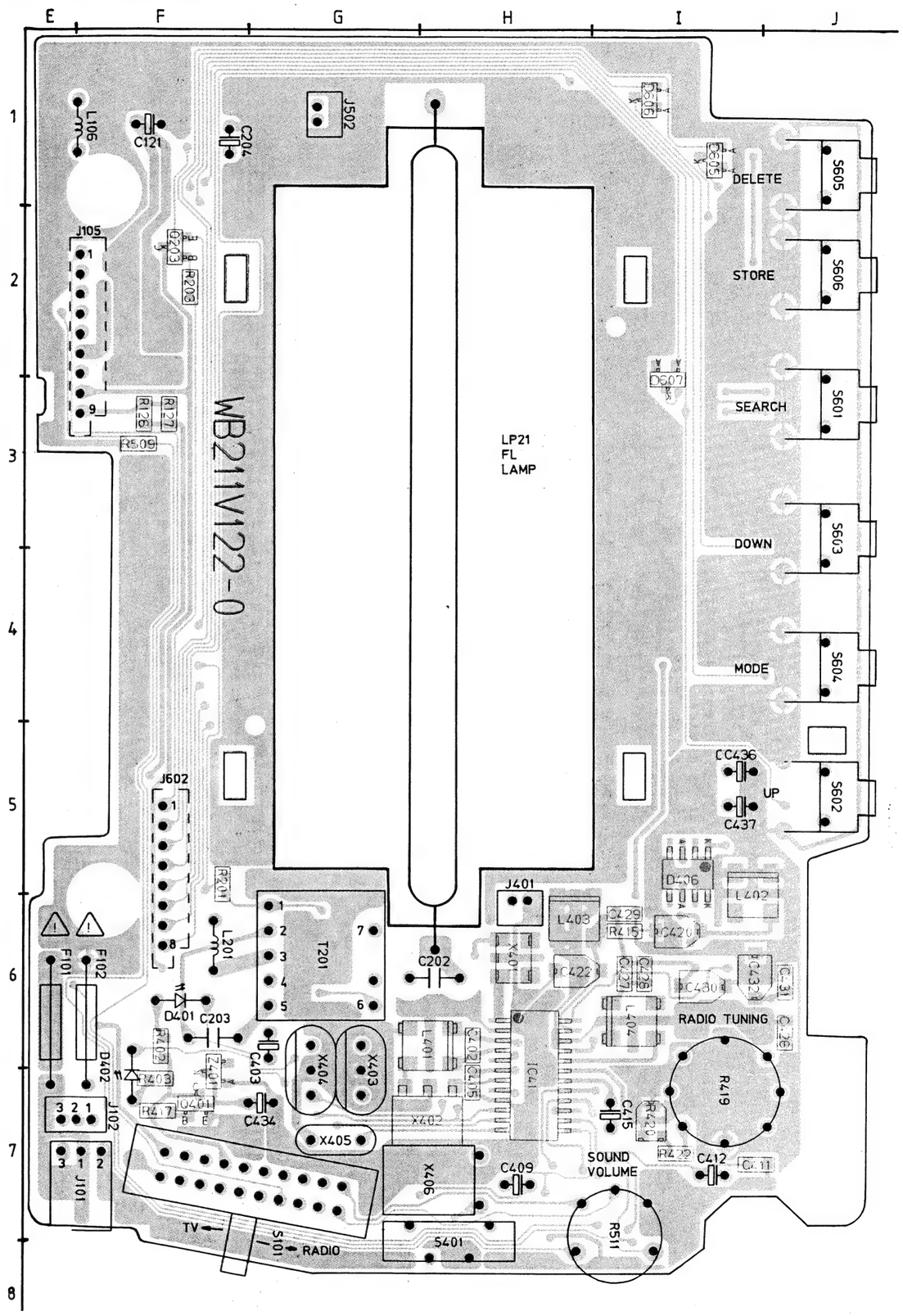

D RADIO B.LIGHT and SWITCH BLOCK P003

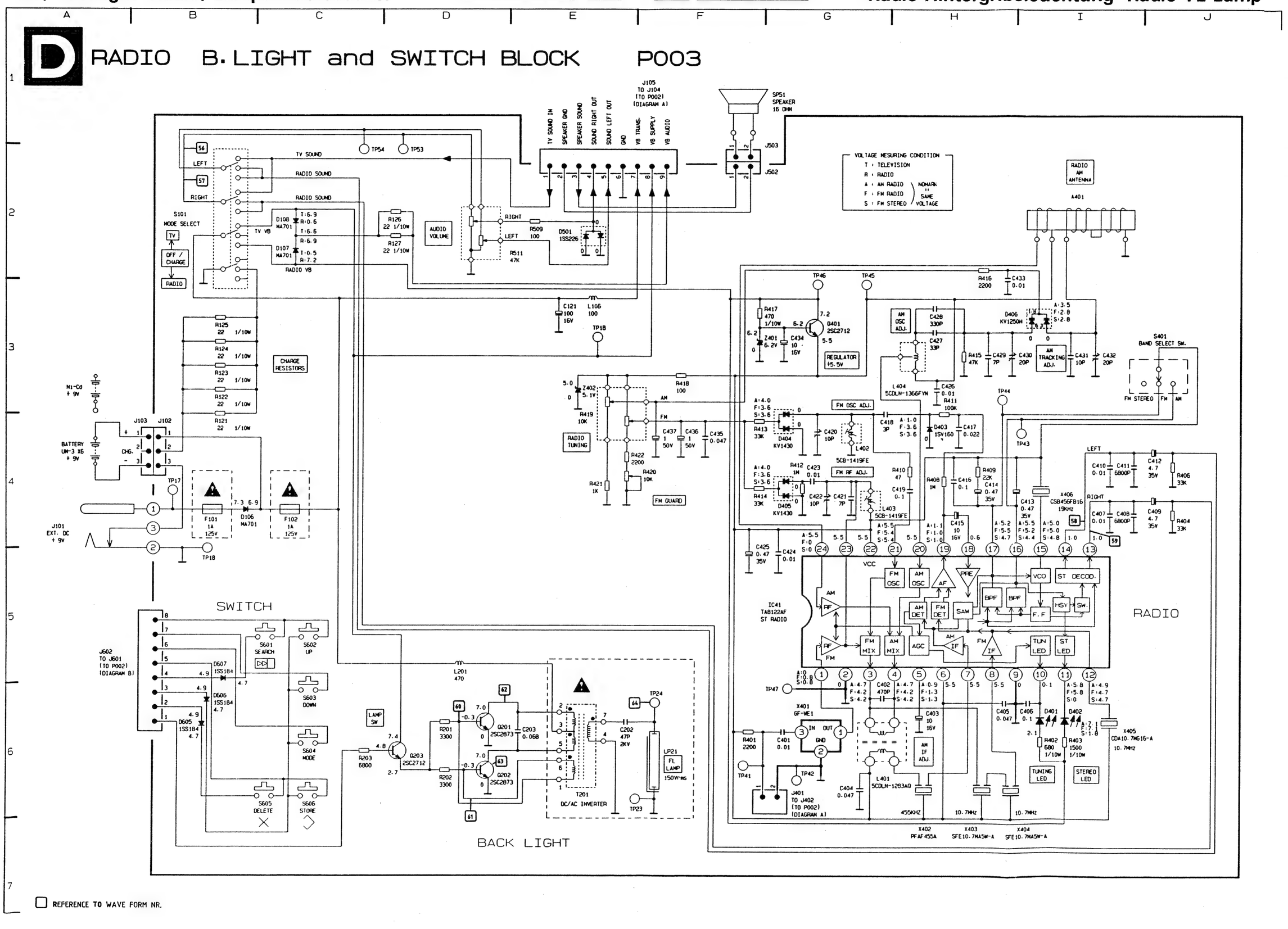

REFERENCE TO WAVE FORM NR.

C121	E3	R406					
C202	E6	R408					
C203	E6	R409					
C401	G6	R410					
C402	G6	R411					
C403	H6	R412					
C404	G6	R413					
C405	H6	R414					
C406	I6	R415					
C407	I4	R416					
C408	I4	R417					
C409	J4	R418					
C410	I4	R419					
C411	I4	R420					
C412	J4	R421					
C413	I4	R422					
C414	H4	R509					
C415	H4	R511					
C416	H4	S101					
C417	H4	S401					
C418	G4	S601					
C419	H4	S602					
C420	G4	S603					
C421	G4	S604					
C422	G4	S605					
C423	G4	S606					
C424	G5	T201					
C425	F5	TP17					
C426	H3	TP18					
C427	H3	TP18					
C428	H3	TP23					
C429	H3	TP24					
C430	H3	TP41					
C431	I3	TP42					
C432	I3	TP43					
C433	H3	TP44					
C434	G3	TP45					
C435	F4	TP46					
C436	F4	TP47					
C437	F4	TP53					
D106	B4	TP54					
D107	C2	X401					
D108	C2	X402					
D401	I6	X403					
D402	I6	X404					
D403	H4	X406					
D404	G4	X406					
D405	G4	Z401					
D406	I3	Z402					
D501	E2						
D605	B6						
D606	B6						
D607	B6						
F101	B4						
F102	C4						
IC41	G6						
J101	B4						
J102	B4						
J105	E2						
J401	G6						
J502	F2						
J602	B5						
L106	E3						
L201	D5						
L401	G6						
L402	G4						
L403	G4						
L404	H3						
LP21	F6						
Q201	D6						
Q202	D6						
Q203	D6						
Q401	G3						
R121	B4						
R122	B3						
R123	B3						
R124	B3						
R125	B3						
R126	D2						
R127	D2						
R201	D6						
R202	D6						
R203	C6						
R401	F6						
R402	I6						
R403	I6						
R404	J4						

Radio Hintergr.beleuchtung Radio TL Lamp

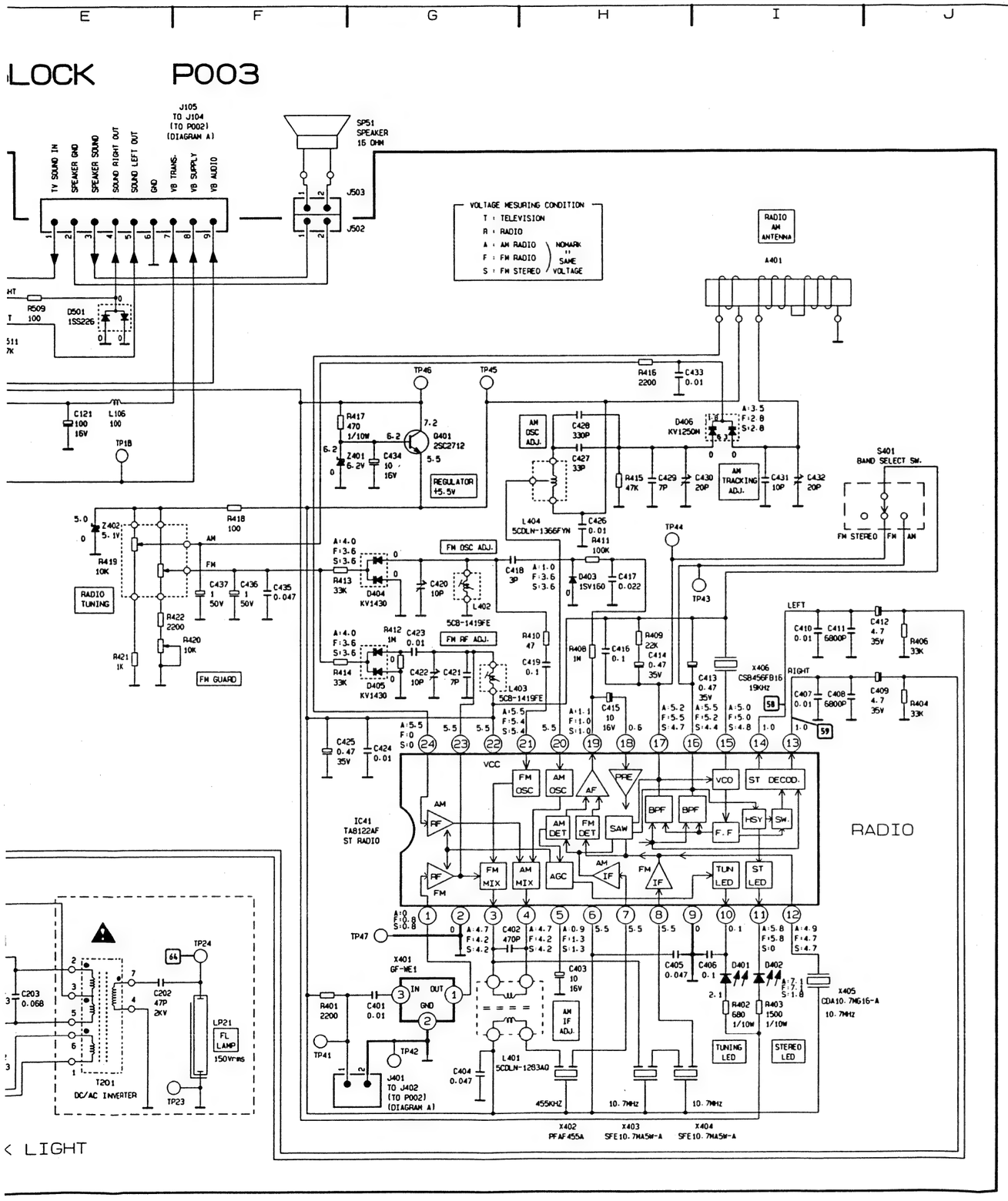

Radio, Backlight Radio, Lampe Fluorescente

C121	E3	R406	J4
C202	E6	R408	H4
C203	E6	R409	H4
C401	G6	R410	H4
C402	G6	R411	H4
C403	H6	R412	G4
C404	G6	R413	F4
C405	H6	R414	F4
C406	I6	R415	H3
C407	I4	R416	H3
C408	I4	R417	F3
C409	J4	R418	F3
C410	I4	R419	F4
C411	I4	R420	E4
C412	J4	R421	E4
C413	I4	R422	E4
C414	H4	R509	E2
C415	H4	R511	D2
C416	H4	S101	B2
C417	H4	S401	J3
C418	G4	S601	C6
C419	H4	S602	C6
C420	G4	S603	C6
C421	G4	S604	C6
C422	G4	S605	C6
C423	G4	S606	C6
C424	G5	T201	E6
C425	F5	TP17	B4
C426	H3	TP18	B5
C427	H3	TP1B	E3
C428	H3	TP23	F6
C429	H3	TP24	F6
C430	H3	TP41	F6
C431	I3	TP42	G6
C432	I3	TP43	I4
C433	H3	TP44	H4
C434	G3	TP45	G3
C435	F4	TP46	G3
C436	F4	TP47	G6
C437	F4	TP53	D2
D106	B4	TP54	C2
D107	C2	X401	G6
D108	C2	X402	H6
D401	I6	X403	H6
D402	I6	X404	H6
D403	H4	X406	I6
D404	G4	X408	I4
D405	G4	Z401	F3
D406	I3	Z402	E3
D501	E2		
D605	B6		
D606	B6		
D607	B6		
F101	B4		
F102	C4		
IC41	G6		
J101	B4		
J102	B4		
J105	E2		
J401	G6		
J502	F2		
J602	B5		
L106	E3		
L201	D5		
L401	G6		
L402	G4		
L403	G4		
L404	H3		
LP21	F6		
Q201	D6		
Q202	D6		
Q203	D6		
Q401	G3		
R121	B4		
R122	B3		
R123	B3		
R124	B3		
R125	B3		
R126	D2		
R127	D2		
R201	D6		
R202	D6		
R203	C6		
R401	F6		
R402	I6		
R403	I6		
R404	J4		

WAVE FORMS FOR DIAGRAM D

56 TP 53 AUDIO LEFT

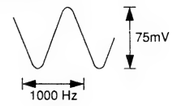

57 TP 54 AUDIO RIGHT

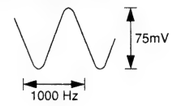

58 14 - IC41

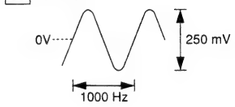

59 13 - IC41

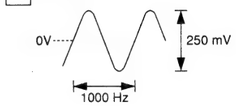

60 B - Q201

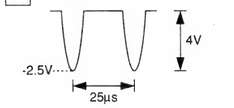

61 B - Q202

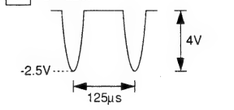

62 C - Q201

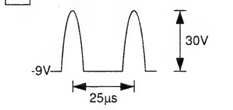

63 C - Q202

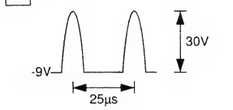

64 TP 24

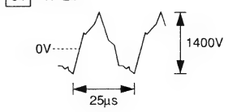

03LC3150
CL 16532055/015
121191

Printdarstellung Print Layout

Print Layout Dessins platine

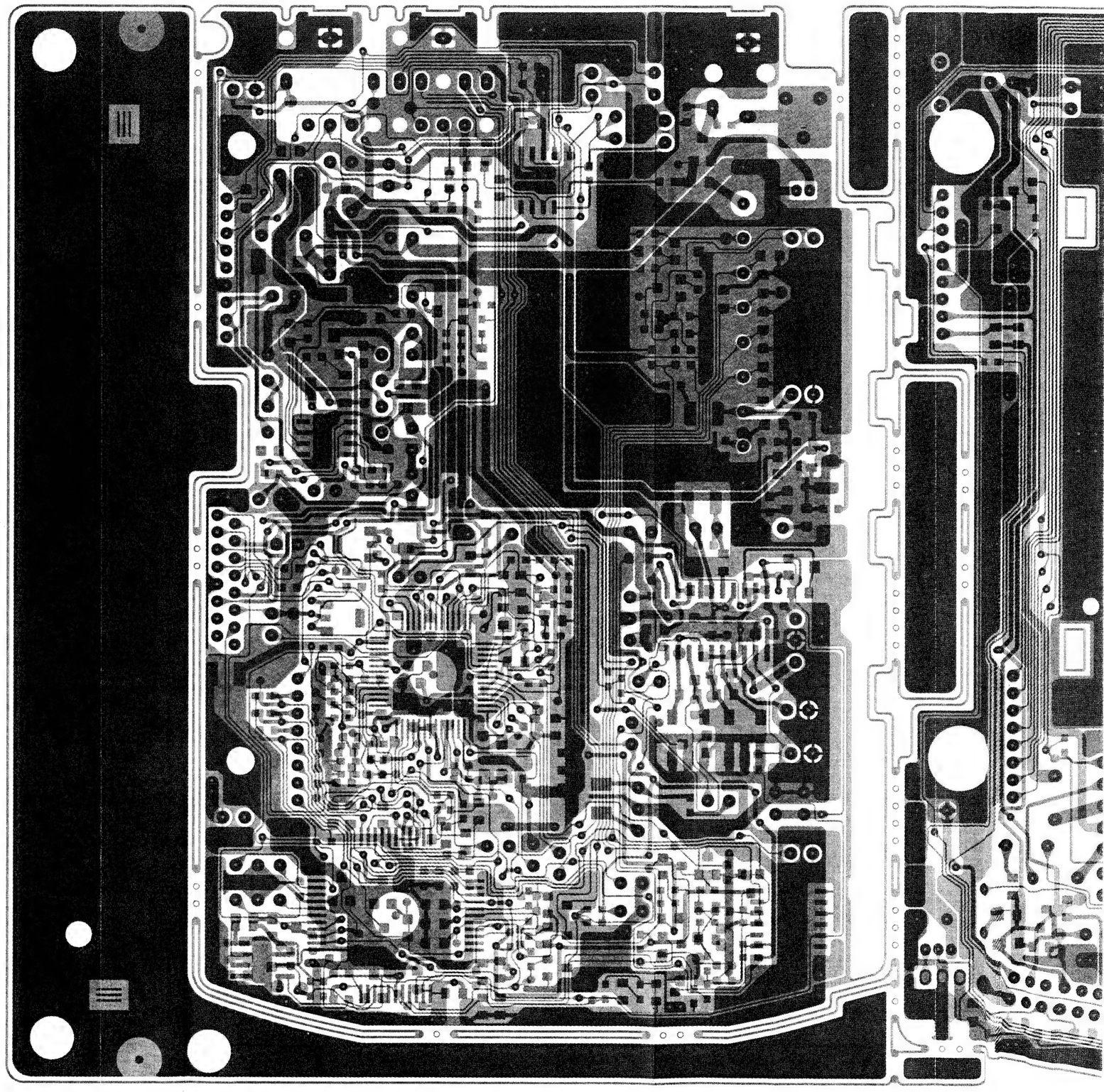

CS40996

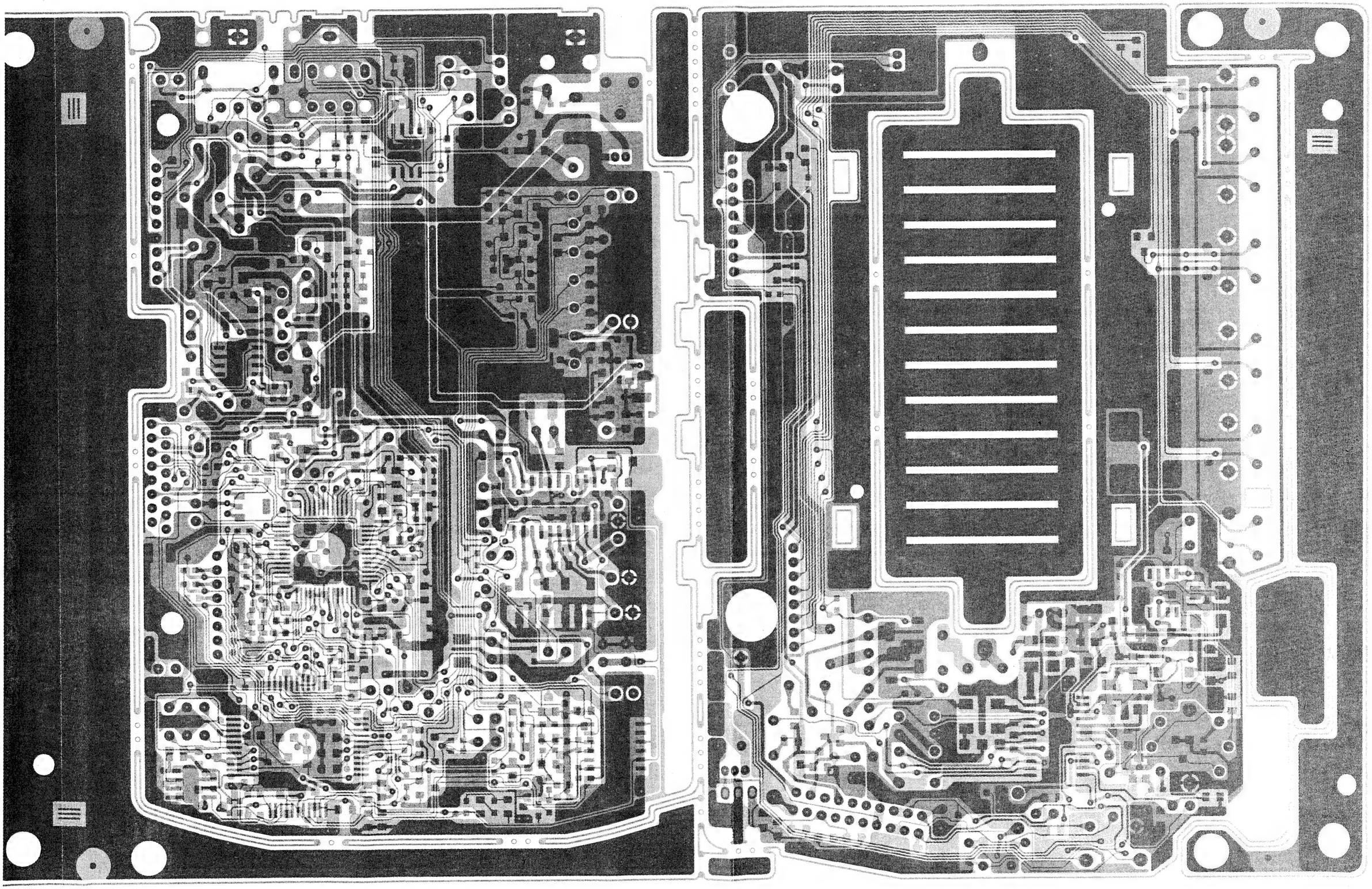

1. Adjustments to the main panel (see Fig. 7.1)

1.1 5V power supply (R103)
- Connect a DC voltmeter to TP13.
- Set potentiometer (R103) so that the DC voltage at TP13 is 5 ± 0.05 (V).

1.2 Detector coil (L712)
- Apply an unmodulated IF-signal to TP74.

* Remark:
IF-signal output must be approx. 90dBμV.
Frequency 38,9MHz.
IF-signal should not overload the demodulator.
- Connect an oscilloscope to TP75.
- Apply an external AGC voltage (2,2V) to TP73.
- Adjust the Detector coil (L712) so that the DC voltage at TP75 becomes minimum.

1.3 AFT coil (L711), coarse adjustment.
- Apply an unmodulated IF-signal to TP74.

* Remark:
IF-signal output must be approx. 90dBμV.
Frequency 38,9MHz.
IF-signal should not overload the demodulator.
- Connect an oscilloscope to TP76.
- Adjust the AFT-coil (L711) so that the DC voltage at TP76 is 2.5V.

1.4 RF-AGC (R751)
- Tune Channel (39 Ch) to a standard colour bar pattern signal (53dBμV).
- Apply a 1 kHz signal 70mVpp (sinusoidal) to TP71 (RF AGC testpoint of the tuner) via the matching network outlined (see fig. 7.2).
- Connect an oscilloscope to TP75.
- Turn potentiometer R751 until waves appear and then turn in the opposite direction until the waves disappear.
- Increase the antenna input signal by 3 dB and check whether the waves appear again.

1.5 AFT coil (L711), fine adjustment.
- Receive a PAL colour bar signal (UHF).
- Apply an unmodulated IF-signal to TP74.

* Remark:
IF-signal output must be approx. 70dBμV.
Frequency 38,9MHz.
IF-signal should not overload the demodulator.
- Connect an oscilloscope to TP75.
- Adjust the AFT-coil (L711) so that the waveform becomes zero beat (see fig.7.3)

1.6 Burst cleaning (FL82)
- Receive a PAL colour bar signal (UHF).
- Connect a two input oscilloscope to pin 6 and 7 of J801.
- Adjust FL82 so that a portion of magenta becomes stable.

1.7 Common electrode, amplitude (R823)
- Apply a grey scale bar pattern.
- Set the brightness control in the mid-position.
- Set potentiometer R823 so that the grey steps can be seen.

1.8 Common electrode, picture contrast (R814)
- Apply a grey scale bar pattern.
- Set the brightness control to mid position.
- Adjust R814 so that the picture contrast becomes maximum.

P002

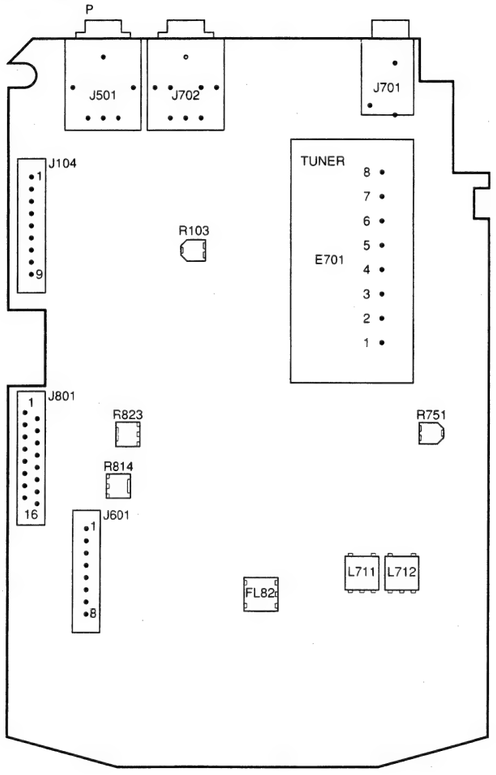

03LC3150
CL 16532055/016
121191

Fig. 7.1

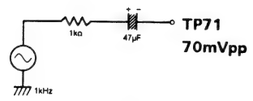

Fig. 7.2

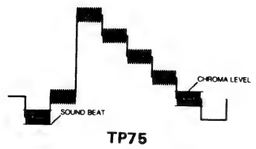

Fig. 7.3

2. Adjustments to the radio Part (See Fig. 7.4)

2.1 AM oscillator (L404)
- Set the AM/FM Stereo selector switch S450 to AM.
- Turn the tuning control R450 to the low-end.
- Connect an oscilloscope to pin 3 on J104.
- Receive an RF signal from a signal generator (525KHz, 400Hz AM 30% mod.)
- Set the AM oscillator coil (L404) for max. sound output.

2.2 AM oscillator (C430)
- Set the AM/FM Stereo selector switch S450 to AM.
- Turn the tuning control R450 to the low-end.
- Connect an oscilloscope to pin 3 on J104.
- Receive an RF signal from a signal generator (1620kHz, 400Hz AM 30% mod.)
- Adjust the trim-capacitor C430 for maximum sound.

2.3 AM tracking (C432)
- Set the AM/FM switch S450 to AM.
- Receive an RF signal from signal generator (1400kHz, 400Hz AM 30% mod.).
- Connect an oscilloscope to pin 3 of J104.
- Adjust the AM trim-capacitor C432 for maximum sound output.

2.4 AM tracking (Bar antenna, A401)
- Set the AM/FM switch S450 to AM.
- Receive an RF signal from signal generator (600kHz, 400Hz AM 30% mod.).
- Connect an oscilloscope to pin 3 of J104.
- Adjust the AM Bar antenna for maximum sound output by moving the coil.

2.5 AM IF (L401)
- Set the AM/FM switch S450 to AM.
- Receive an RF signal from signal generator (1000kHz, 400Hz AM 30% mod.).
- Connect an oscilloscope to pin 3 of J104.
- Adjust coil L401 for maximum sound output.

2.6 FM oscillator (L402)
- Set the AM/FM switch S450 to FM Mono.
- Turn the tuning control R450 to the low-end.
- Connect an oscilloscope to pin 3 of J104.
- Receive an RF signal (87,7MHz 1kHz FM, 40KHz mod.)
- Adjust L402 for maximum sound output.

2.7 FM oscillator (C420)
- Set the AM/FM switch S450 to FM mono.
- Turn the tuning control R450 to the high-end.
- Connect an oscilloscope to pin 3 on J104.
- Receive an RF signal (108,5MHz, 1kHz FM, 40kHz mod.)
- Adjust C420 for maximum output.
- Remark: Repeat paragraph 2.6

2.8 FM RF (L403)
- Set the AM/FM switch S450 to FM mono.
- Connect an oscilloscope to pin 3 on J104.
- Receive a weak RF signal (90MHz, 1kHz FM, 40kHz mod.)
- Adjust L403 for maximum sound output.

2.9 FM RF (C422)
- Set the AM/FM switch S450 to FM stereo.
- Connect an oscilloscope to pin 3 on J104.
- Receive a RF signal (106MHz, 1kHz FM, 40kHz mod.)
- Adjust the RF capacitor C422 for maximum sound output.
- Remark: Repeat paragraph 2.8

P003

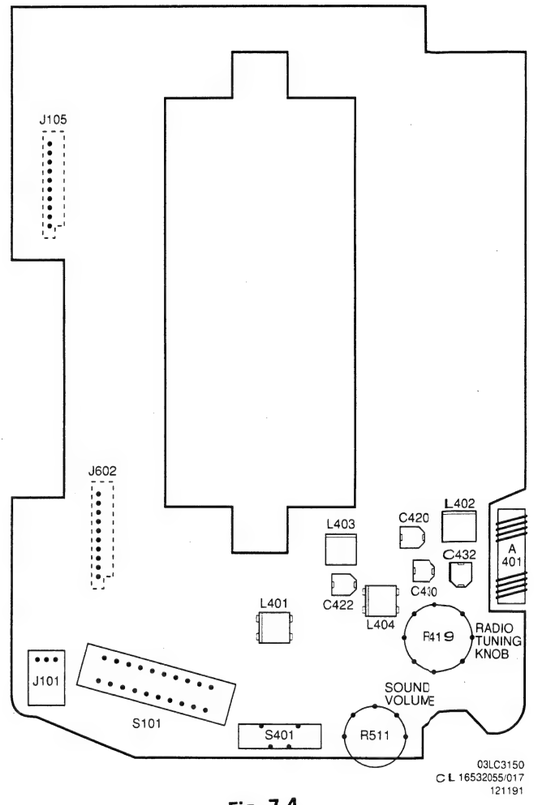

03LC3150
CL 16532055/017
121191

Fig. 7.4

Repair tips

1. Servicing of SMDs (Surface Mounted Devices)

1.1 General cautions on handling and storage

a. Oxidation on the terminals of SMDs results in poor soldering. Do not handle SMDs with bare hands.

b. Avoid using storage places that are sensitive to oxidation such as places with sulphur or chlorine gas, direct sunlight, high temperatures or a high degree of humidity.
The capacitance or resistance value of the SMDs may be affected by this.

c. Rough handling of circuit boards containing SMDs may cause damage to the components as well as the circuit boards. Circuit boards containing SMDs should never be bent or flexed. Different circuit board materials expand and contract at different rates when heated or cooled and the components and/or solder connections may be damaged due to the stress. Never rub or scrape chip components as this may cause the value of the component to change. Similarly, do not slide the circuit board across any surface.

1.2. Removal of SMDs

a. Heat the solder (for 2-3 seconds) at each terminal of the chip. By means of litz wire and a slight horizontal force, small components can be removed with the soldering iron. They can also be removed with a solder sucker (see Fig. 8.1A) or:

b. While holding the SMD with a pair of tweezers, take it off gently using the soldering iron's heat applied to each terminal (see Fig. 8.1B).

c. Remove the excess solder on the solder lands by means of litz wire or a solder sucker (see Fig. 8.1C).

Caution on removal:

a. When handling the soldering iron, use suitable pressure and be careful.

b. When removing the chip, do not use undue force with the pair of tweezers.

c. The soldering iron to be used (approx. 30 W) should preferably be equipped with a thermal control (soldering temperature: 225 to 250°C).

d. The chip, once removed, must **never** be reused.

1.3 Attachment of SMDs

a. Locate the SMD on the solder lands by means of tweezers and solder the component on one side. Ensure that the component is positioned correctly on the solder lands (see Fig. 8.2A).

b. Next complete the soldering of the terminals of the component (see Fig. 8.2B).

Caution when attaching SMDs:

a. When soldering the SMD terminals, do not touch them directly with the soldering iron. The soldering should be done as quickly as possible; care must be taken to avoid damage to the terminals of the SMDs themselves.

b. Keep the SMD's body in contact with the printed board when soldering.

c. The soldering iron to be used (approx. 30 W) should preferably be equipped with a thermal control (soldering temperature: 225 to 250°C).

d. Soldering should not be done outside the solder land.

e. Soldering flux (of rosin) may be used, but should not be acidic.

f. After soldering, let the SMD cool down gradually at room temperature.

g. The quantity of solder must be proportional to the size of the solder land. If the quantity is too great, the SMD might crack or the solder lands might be torn loose from the printed board (see Fig. 8.3).

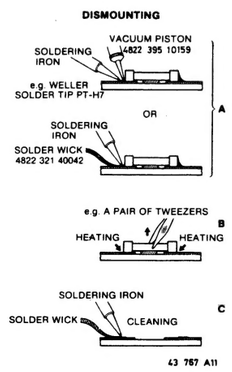

Fig. 8.1

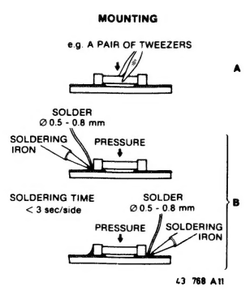

Fig. 8.2

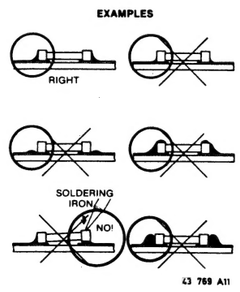

Fig. 8.3

2. Repair mode

If the "MODE" key and the "SEARCH" key are pressed at the same time, while the set is switched on from "OFF" position in "TV" position, the set will enter into the repair mode.
When the set is in the repair mode, this will be indicated on the screen by means of OSD information. The indication is: "PEPAIR MODE".

The following operations can be selected by means of pushing one of the keys during repair mode.

SEARCH	: VHF-L band, lowest tuning voltage
STORE	: VHF-L band, highest tuning voltage
MODE	: VHF-H band, lowest tuning voltage
DELETE	: VHF-H band, highest tuning voltage
MULTI -	; UHF band, lowest tuning voltage
MULTI +	: UHF band, highest tuning voltage

Reset of the repair mode can be done by putting "POWER" switch in "OFF" position.

3. Error messages

If an error is dedected by the microprocessor the program enters an infinite loop.
Also (if possible) the error messages F0 or F1 or F2 are displayed on the screen.

F0 means: Internal RAM error
F1 means: Timer error
F2 means: Eeprom error

Spare parts list / Stückliste / Liste

Main, Radio and Backlight P.C. Board

ANTENNA

A401	4822 158 60594	AM BAR Ant.
A701	4822 303 30411	ROD Antenna

CAPACITORS

C101	4822 122 32698	4700pF
C102	4822 122 33689	0.01µF
C103	4822 124 22725	10µF 16V
C104	4822 122 32697	2200pF
C105	4822 122 33714	0.1 µF
C106	4822 124 22728	100µF 16V
C107	4822 124 22726	4.7µF 35V
C109	4822 124 22727	47µF 16V
C111	4822 124 22728	100µF 16V
C112	4822 124 22728	100µF 16V
C114	4822 124 22727	47µF 16V
C115	4822 124 22727	47µF 16V
C116	4822 124 22726	4.7µF 35V
C118	4822 122 33689	0.01µF
C119	4822 122 33714	0.1 µF
C120	4822 122 33714	0.1 µF
C121	4822 124 22728	100 µF
C202	4822 122 33711	47pF 2kV
C203	4822 121 42697	0.068µF 50V
C204	4822 124 23464	1 µF 50V
C301	4822 122 33689	0.01µF
C302	4822 122 32686	100pF
C401	4822 122 33689	0.01µF
C402	4822 122 33712	470pF
C403	4822 124 22725	10µF 16V
C404	4822 122 32669	47000pF
C405	4822 122 32669	47000pF
C406	4822 122 33714	100nF
C407	4822 122 33689	0.01µF
C408	4822 122 33713	6800pF
C409	4822 124 22726	4.7µF 35V
C410	4822 122 33689	0.01µF
C411	4822 122 33713	6800pF
C412	4822 124 22726	4.7µF 35V
C413	4822 124 23127	0.47µF 35V
C414	4822 124 23127	0.47µF 35V
C415	4822 124 22725	10µF 16V
C416	4822 122 33714	100nF
C417	4822 122 32701	0.022µF
C418	4822 122 33709	3pF
C419	4822 122 33714	100nF
C420	4822 125 60158	10pF
C421	4822 126 10006	7 pF
C422	4822 125 60158	10pF
C423	4822 122 33689	0.01µF
C424	4822 122 33689	0.01µF
C425	4822 124 23127	0.47µF 35V
C426	4822 122 33689	0.01µF
C427	4822 122 32693	33pF
C428	4822 122 32703	330pF
C429	4822 126 10006	7pF
C430	4822 125 60155	20pF
C431	4822 122 33129	10pF
C432	4822 125 60155	20pF
C433	4822 122 33689	0.01µF
C434	4822 124 22725	10µF 16V
C435	4822 122 32669	47000pF
C436	4822 124 23464	1 µF 50V
C437	4822 124 23464	1 µF 50V
C501	4822 124 22728	100µF 16V
C502	4822 124 22728	100 µF
C503	4822 122 33714	100nF
C504	4822 124 22728	100µF 16V
C505	4822 124 22725	10µF 16V
C506	4822 122 33712	470pF
C507	4822 122 33712	470pF
C508	4822 124 22725	10µF 16V
C509	4822 122 32669	47000pF
C510	4822 122 32698	4700pF
C511	4822 124 22727	47µF
C601	4822 122 32694	47pF
C602	4822 122 32694	47pF
C603	4822 122 32694	47pF
C609	4822 124 23464	1µF 50V
C610	4822 124 22728	100µF 16V
C612	4822 122 33714	100nF
C613	4822 122 33714	100nF
C656	4822 124 23464	1µF 50V
C657	4822 124 23464	1µF 50V
C658	4822 122 33689	0.01µF
C659	4822 122 33689	0.01µF
C660	4822 122 33689	0.01µF
C661	4822 122 33135	220pF
C662	4822 122 33135	220pF
C663	4822 122 33135	220pF
C664	4822 122 33689	0.01µF
C665	4822 122 33714	100nF
C701	4822 122 33689	0.01µF
C702	4822 122 33714	100nF
C703	4822 122 33689	0.01µF
C704	4822 122 33689	0.01µF
C705	4822 122 33714	100nF
C706	4822 122 33714	100nF
C707	4822 122 33714	100nF
C708	4822 122 33714	100nF
C709	4822 122 33714	0.1µF
C710	4822 122 33714	100nF
C711	4822 122 33714	0.1µF
C712	4822 122 33714	0.1µF
C713	4822 122 32669	47000pF
C714	4822 122 32686	100pF
C715	4822 122 32686	100pF
C716	4822 124 22726	4.7µF 35V
C717	4822 124 22725	10µF 16V
C718	4822 122 33689	0.01µF
C719	4822 124 23464	1µF 50V
C720	4822 124 23464	1µF 50V
C721	4822 122 33689	0.01µF
C722	4822 122 33714	100nF
C723	4822 124 22727	47µF 16V
C724	4822 122 33132	22pF
C725	4822 122 32697	2200pF
C726	4822 124 22725	10µF 16V
C727	4822 122 32693	33pF
C728	4822 122 33714	100nF
C729	4822 122 32693	33pF
C730	4822 124 22725	10µF 16V
C731	4822 122 33714	100nF
C732	4822 122 32694	47pF
C733	4822 124 23464	1µF 50V
C734	4822 124 22726	4.7µF 35V
C735	4822 124 22725	10µF 16V
C736	4822 122 33714	0.1µF
C801	4822 122 33689	0.01µF
C802	4822 122 33689	0.01µF
C803	4822 122 33689	0.01µF
C804	4822 122 33689	0.01µF
C805	4822 122 33138	680pF
C806	4822 122 33689	0.01µF
C807	4822 122 33714	100nF
C808	4822 124 22725	10µF 16V
C809	4822 122 33689	0.01µF
C810	4822 124 23464	1µF 50V
C811	4822 122 32697	2200pF
C812	4822 122 32701	0.022µF
C813	4822 124 23464	1µF 50V
C814	4822 122 33689	0.01µF
C815	5322 122 33538	150pF
C816	4822 122 33689	0.01µF
C817	4822 122 33689	0.01µF
C818	4822 122 32669	47000pF
C819	4822 122 33689	0.01µF
C820	4822 122 33132	22pF
C821	4822 122 33689	0.01µF
C822	4822 124 23127	0.47µF 35V
C823	4822 122 33689	0.01µF
C824	4822 122 33689	0.01µF
C825	4822 124 22725	10µF 16V
C826	4822 122 33689	0.01µF
C827	4822 122 33689	0.01µF
C828	4822 122 33689	0.01µF
C829	4822 122 33689	0.01µF
C830	4822 122 33129	10pF

DIODES

D101	4822 130 81166	1SS184
D102	4822 130 81166	1SS184
D103	4822 130 81167	MA701
D104	4822 130 81167	MA701
D105	4822 130 81166	1SS184
D106	4822 130 81167	MA701
D107	4822 130 81167	MA701
D108	4822 130 81167	MA701
D301	4822 130 81166	1SS184
D401	4822 130 80327	LT3G8B Green
D402	4822 130 80326	LT3D8B Red
D403	4822 130 81174	1SV160
D404	4822 130 81172	KV1430
D405	4822 130 81172	KV1430
D406	4822 130 81173	KV1250M
D501	4822 130 81089	1SS226
D601	4822 130 81166	1SS184
D602	4822 130 81166	1SS184
D603	4822 130 81166	1SS184
D605	4822 130 81166	1SS184
D606	4822 130 81166	1SS184
D607	4822 130 81166	1SS184
D701	4822 130 81168	1SS268

TUNER

E701	4822 210 10456	TV Tuner

TUNED CIRCUIT

FL81	4822 242 72589	4.43MHz Filter
FL82	4822 242 81069	4.43MHz Filter

FUSE

F101	4822 252 31046	FUSE 1A
F102	4822 252 31046	FUSE 1A

INTEGRATED CIRCUIT

IC11	4822 209 60119	FA7610N
IC31	4822 209 73911	4069UBF
IC41	4822 209 73909	TA8122AF
IC51	5322 209 61872	NJM2073M
IC61	4822 209 30688	TMP47C63F4
IC62	4822 209 52094	X24C02S
IC71	4822 209 30224	M52018FP
IC81	4822 209 30687	R3P96

Spare parts list / Stückliste / Liste

Main, Radio and Backlight P.C.Board

SOCKETS

J101	4822 265 30656	DC JACK
J104	4822 267 31436	9p male
J102	4822 265 30858	Battery Con.
J105	4822 267 50779	9p female
J401	4822 267 31204	2p
J501	4822 267 31022	HP Jack
J502	4822 267 31204	2p
J503	4822 321 61413	Speaker cord
J601	4822 267 31435	8p male
J602	4822 267 31434	8p female
J701	4822 267 31221	Jack (-/05/10)
J702	4822 267 31021	A/V Jack
J801	4822 267 31206	8p female

COILS

L101	4822 157 60429	
L102	4822 157 60431	
L103	4822 157 53865	
L104	4822 157 60431	
L105	4822 157 60429	
L106	4822 157 53865	
L201	4822 157 53869	
L401	4822 156 11106	
L402	4822 156 11108	
L403	4822 156 11108	
L404	4822 156 11107	
L601	4822 157 53873	100µH
L701	4822 157 62322	
L702	4822 157 53871	
L711	4822 156 21614	
L712	4822 156 21614	
L713	4822 157 60178	

LAMP

LP21	4822 134 80169	FL LAMP

LCD DISPLAY

PL31	4822 130 90922	3" Color LCD

TRANSISTORS

Q101	4822 130 61425	2SC2873-Y
Q201	4822 130 61425	2SC2873-Y
Q202	4822 130 61425	2SC2873-Y
Q203	4822 130 43398	2SC2712 GR
Q401	4822 130 43398	2SC2712 GR
Q601	4822 130 43398	2SC2712 GR
Q602	4822 130 43398	2SC2712 GR
Q603	4822 130 43398	2SC2712 GR
Q701	4822 130 61424	2SC 2714 O
Q702	4822 130 43398	2SC2712 GR
Q703	4822 130 42733	2SA1162 G
Q704	4822 130 42733	2SA1162(G)
Q705	4822 130 43398	2SC2712 GR
Q706	4822 130 43398	2SC2712 GR
Q707	4822 130 42733	2SA1162(G)
Q708	4822 130 43398	2SC2712 GR
Q709	4822 130 61884	RN1404
Q710	4822 130 43398	2SC2712 GR
Q711	4822 130 43398	2SC2712 GR
Q712	4822 130 42733	2SA1162(G)

RESISTORS

R101	4822 051 30105	1M 5%
R102	4822 051 30102	1k 5%
R103	4822 100 11604	1k 25%
R104	4822 051 30224	220k 5%
R105	4822 051 30682	6.8k 5%
R106	4822 051 30472	4.7k 5%
R107	4822 051 30103	10k 5%
R108	4822 051 30471	470 5%
R109	4822 051 30224	220k 5%
R110	4822 051 30684	680k 5%
R111	4822 051 30473	47k 5%
R112	4822 116 82487	0 5%
R113	4822 051 30224	220k 5%
R121	4822 111 91459	22 5%
R122	4822 111 91459	22 5%
R123	4822 111 91459	22 5%
R124	4822 111 91459	22 5%
R125	4822 111 91459	22 5%
R126	4822 111 91459	22 5%
R127	4822 111 91459	22 5%
R201	4822 051 30332	3.3k 5%
R202	4822 051 30332	3.3k 5%
R203	4822 051 30224	220k 5%
R301	4822 051 30103	10k 5%
R302	4822 051 30103	10k 5%
R303	4822 051 30105	1M 5%
R304	4822 051 30333	33k 5%
R401	4822 051 30222	2.2k 5%
R402	4822 111 90924	680 5%
R403	4822 111 91369	1.5k 5%
R404	4822 051 30333	33k 5%
R406	4822 051 30333	33k 5%
R408	4822 051 30105	1M 5%
R409	4822 051 30223	22k 5%
R410	4822 051 30479	47 5%
R411	4822 051 30104	100k 5%
R412	4822 051 30105	1M 5%
R413	4822 051 30333	33k 5%
R414	4822 051 30333	33k 5%
R415	4822 051 30473	47k 5%
R416	4822 051 30222	2.2k 5%
R417	4822 111 91192	470 5%
R418	4822 051 30101	100 5%
R419	4822 100 11463	10k Radio T.
R420	4822 100 11608	10k 25%
R421	4822 051 30102	1k 5%
R422	4822 051 30222	2.2k 5%
R501	4822 116 90503	150 5%
R502	4822 116 90503	150 5%
R503	4822 051 30152	1.5k 5%
R504	4822 051 30152	1.5k 5%
R505	4822 111 91414	10 5%
R506	4822 051 30223	22k 5%
R507	4822 051 30682	6.8k 5%
R508	4822 051 30333	33k 5%
R509	4822 051 30101	100 5%
R511	4822 100 11464	47k Volume
R601	4822 051 30101	100 5%
R602	4822 051 30101	100 5%
R603	4822 051 30101	100 5%
R605	4822 051 30103	10k 5%
R606	4822 051 30103	10k 5%
R607	4822 051 30103	10k 5%
R609	4822 051 30103	10k 5%
R610	4822 051 30103	10k 5%
R611	4822 051 30683	68k 5%
R612	4822 051 30333	33k 5%
R613	4822 051 30104	100k 5%
R614	4822 051 30103	10k 5%
R615	4822 051 30102	1k 5%
R616	4822 051 30101	100 5%
R617	4822 051 30473	47k 5%
R618	4822 051 30103	10k 5%
R620	4822 051 30103	10k 5%
R621	4822 051 30103	10k 5%
R631	4822 051 30223	22k 5%
R632	4822 051 30103	10k 5%
R633	4822 051 30153	15k 5%
R634	4822 051 30472	4.7k 5%
R635	4822 051 30683	68k 5%
R636	4822 051 30682	6.8k 5%
R637	4822 051 30223	22k 5%
R638	4822 051 30472	4.7k 5%
R656	4822 051 30224	220k 5%
R702	4822 051 30152	1.5k 5%
R703	4822 051 30682	6.8k 5%
R704	4822 051 30479	47 5%
R705	4822 051 30684	680 5%
R706	4822 051 30222	2.2k 5%
R707	4822 051 30479	47 5%
R708	4822 051 30473	47k 5%
R709	4822 051 30103	10k 5%
R710	4822 051 30223	22k 5%
R711	4822 051 30223	22k 5%
R712	4822 051 30103	10k 5%
R713	4822 051 30153	15k 5%
R714	4822 051 30333	33k 5%
R715	4822 116 82487	0 5%
R717	4822 051 30223	22k 5%
R718	4822 051 30222	2.2k 5%
R719	4822 051 30223	22k 5%
R720	4822 051 30334	330k 5%
R731	4822 051 30154	150k 5%
R732	4822 051 30153	15k 5%
R733	4822 051 30333	33k 5%
R735	4822 051 30103	10k 5%
R736	4822 051 30472	4.7k 5%
R737	4822 051 30103	10k 5%
R738	4822 051 30102	1k 5%
R739	4822 051 30222	2.2k 5%
R740	4822 051 30103	10k 5%
R741	4822 051 30153	15k 5%
R742	4822 051 30103	10k 5%
R743	4822 051 30683	68k 5%
R745	4822 051 30222	2.2k 5%
R746	4822 051 30222	2.2k 5%
R747	4822 116 82487	0 5%
R750	4822 051 30471	470 5%
R751	4822 100 11608	10k 25%
R752	4822 051 30471	470 5%
R753	4822 051 30152	1.5k 5%
R754	4822 051 30102	1k 5%
R755	4822 051 30105	1M 5%
R756	4822 051 30224	220k 5%
R757	4822 051 30224	220k 5%
R758	4822 051 30684	680 5%
R760	4822 051 30472	4.7k 5%
R761	4822 051 30101	100 5%
R762	4822 051 30759	75 5%
R763	4822 051 30102	1k 5%
R764	4822 051 30683	68k 5%
R765	4822 051 30223	22k 5%
R801	4822 051 30104	100k 5%
R802	4822 051 30473	47k 5%
R803	4822 051 30473	47k 5%
R804	4822 051 30472	4.7k 5%
R805	4822 051 30472	4.7k 5%
R806	4822 051 30472	4.7k 5%
R807	4822 051 30105	1M 5%
R808	4822 051 30332	3.3k 5%
R809	4822 051 30334	330k 5%

Spare parts list / Stückliste / Liste

Main Radio and Backlight P.C.Board

R810	4822 051 30684	680k 5%
R811	4822 051 30105	1M 5%
R812	4822 051 30221	220 5%
R813	4822 051 30223	22k 5%
R814	4822 100 11605	10k 25%
R815	4822 051 30103	10k 5%
R816	4822 051 30333	33k 5%
R817	4822 051 30102	1k 5%
R818	4822 051 30683	68k 5%
R819	4822 051 30103	10k 5%
R820	4822 051 30472	4.7k 5%
R821	4822 051 30682	6.8k 5%
R822	4822 051 30473	47k 5%
R823	4822 100 11605	10k 25%
R824	4822 051 30473	47k 5%
R825	4822 051 30101	100 5%
R826	4822 051 30101	100 5%
R827	4822 051 30101	100 5%
R828	4822 051 30153	15k 5%
R829	4822 051 30333	33k 5%
R830	4822 051 30473	47k 5%
R831	4822 051 30473	47k 5%
R832	4822 051 30333	33k 5%
R833	4822 051 30473	47k 5%
R834	4822 051 30333	33k 5%
R835	4822 051 30333	33k 5%
R837	4822 051 30333	33k 5%
R838	4822 051 30473	47k 5%
R840	4822 111 91459	22 5%
R841	4822 051 30153	15k 5%
R842	4822 051 30105	1M 5%
R843	4822 051 30105	1M 5%
R844	4822 051 30105	1M 5%
R845	4822 051 30105	1M 5%
R846	4822 051 30105	1M 5%
R847	4822 051 30105	1M 5%
R848	4822 051 30105	1M 5%
R849	4822 051 30105	1M 5%
R850	4822 051 30105	1M 5%
R851	4822 051 30105	1M 5%
R854	4822 051 30105	1M 5%
R855	4822 051 30105	1M 5%
R856	4822 051 30105	1M 5%
R857	4822 051 30105	1M 5%
R858	4822 051 30102	1k 5%

SPEAKER

SP51	4822 240 30548	SPEAKER

SWITCH

S101	4822 277 21551	POWER
S401	4822 277 21286	AM/FM
S601	4822 276 13185	PUSH SW
S602	4822 276 13185	PUSH SW
S603	4822 276 13185	PUSH SW
S604	4822 276 13185	PUSH SW
S605	4822 276 13185	PUSH SW
S606	4822 276 13185	PUSH SW

TRANSFORMERS

T101	4822 146 30835	POWER
T201	4822 146 21653	BACK Light

CRISTALS AND FILTERS

X401	4822 156 11105	GF-WE1
X402	4822 242 72381	AWF FILTER
X403	4822 242 72385	10.7MHz
X404	4822 242 72385	10.7MHz
X405	4822 242 72386	10.7MHz
X406	4822 242 72382	19KHz FILTER
X601	4822 242 72592	5.56MHz
X602	4822 242 72223	4.00MHz
X701	4822 242 81071	38.9MHz
X702	4822 121 40545	5.5MHz (-/02/08/10)
X702	4822 242 72906	6MHz (-/05)
X703	4822 242 73622	5.5MHz (-/02/08/10)
x703	4822 242 72187	6MHz (-/05)
X704	4822 242 72586	5.5MHz (-/02/08/10)
X704	4822 242 72907	6MHz (-/05)
X801	4822 242 72593	4,43MHz

STABILIZERS

Z401	4822 130 81672	6,2V ZENER
Z402	4822 130 32955	5.1V ZENER
Z601	4822 130 81171	4.3V ZENER